Tumble Dryers

Installation

120 Pound (55 Kilogram) Capacity
170 Pound (77 Kilogram) Capacity
200 Pound (90 Kilogram) Capacity
18 Digit Model Numbers with 6 in 13th Position
Refer to Page 12 for Model Identification

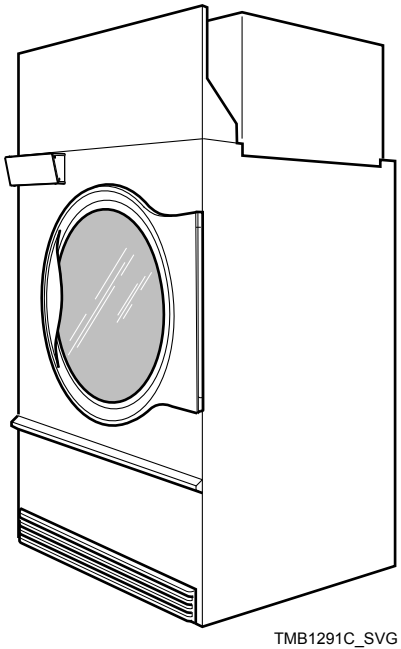

TMB1291C_SVG

Original Instructions
Keep These Instructions for Future Reference.
CAUTION: Read the instructions before using the machine.
(If this machine changes ownership, this manual must accompany machine.)

Part No. 70686901ENR3
October 2022

Installation must conform with local codes or, in the absence of local codes, with:

In the U.S.A., installation must conform to the latest edition of the American National Standard Z223.1/ NFPA 54 “National Fuel Gas Code” and Standard ANSI/NFPA 70 “National Electric Code.”

In Canada, installation must comply with Standards CAN/CSA-B149.1 Natural Gas and Propane Installation Code and CSA C22.1, latest edition, Canadian Electric Code, Part I.

In Australia and New Zealand, installation must comply with the Gas Installations Standard AS/NZS 5601 Part 1: General Installations.

In Europe, before installation, check that the local distribution conditions, nature of gas and pressure, and the adjustment of the appliance are compatible.

This equipment has been designed and certified to comply with IEC/EN 60335 electrical safety standards for tumble dryers.

Read all instructions before using tumble dryer.

IMPORTANT: If it is unavoidable that fabrics that contain vegetable or cooking oil or have been contaminated by hair care products be placed in a tumble dryer, they should first be washed in hot water with extra detergent. This will reduce, but not eliminate, the hazard.

WARNING

FOR YOUR SAFETY, the information in this manual must be followed to minimize the risk of fire or explosion or to prevent property damage, personal injury or death.

W033

DANGER

Electric shock hazard will result in death or serious injury. Disconnect all electric power to appliance and accessories and wait five (5) minutes before servicing.

W925

Units are IPx4 when enclosed per these instructions.

WARNING

- **Do not store or use gasoline or other flammable vapors and liquids in the vicinity of this or any other appliance.**
- **WHAT TO DO IF YOU SMELL GAS:**
  - **Do not try to light any appliance.**
  - **Do not touch any electrical switch; do not use any phone in your building.**
  - **Clear the room, building or area of all occupants.**
  - **Immediately call your gas supplier from a neighbor’s phone. Follow the gas supplier’s instructions.**
  - **If you cannot reach your gas supplier, call the fire department.**
- **Installation and service must be performed by a qualified installer, service agency or the gas supplier.**

W052

IMPORTANT: Information must be obtained from a local gas supplier on instructions to be followed if the user smells gas. These instructions must be posted in a prominent location. Step-by-step instructions of the above safety information must be posted in a prominent location near the tumble dryer for customer use.

IMPORTANT: Post the following statement in a prominent location

FOR YOUR SAFETY

Do not store or use gasoline or other flammable vapors and liquids in the vicinity of this or any other appliance.

IMPORTANT: The installer must fully test the tumble dryer after installation and demonstrate to the owner how to operate the machine.

IMPORTANT: The machine shall only be installed in a room separated from inhabited rooms, incorporating appropriate ventilation specified in the National Installation Regulations.

IMPORTANT: The tumble dryer is not to be used if industrial chemicals have been used for cleaning.

© Published by permission of the copyright owner - DO NOT COPY or TRANSMIT

WARNING

To reduce the risk of electric shock, fire, explosion, serious injury or death:

- **Disconnect electric power to the tumble dryer before servicing.**
- **Close gas shut-off valve to gas tumble dryer before servicing.**
- **Close steam valve to steam tumble dryer before servicing.**
- **Never start the tumble dryer with any guards/ panels removed.**
- **Whenever ground wires are removed during servicing, these ground wires must be reconnected to ensure that the tumble dryer is properly grounded.**

W002R1

WARNING

- **Installation of unit must be performed by a qualified installer.**
- **Install tumble dryer according to manufacturer's instructions and local codes.**
- **DO NOT install a tumble dryer with flexible plastic venting materials. If flexible metal (foil type) duct is installed, it must be of a specific type identified by the appliance manufacturer as suitable for use with tumble dryer. Refer to section on connecting exhaust system. Flexible venting materials are known to collapse, be easily crushed, and trap lint. These conditions will obstruct tumble dryer airflow and increase the risk of fire.**

W752R1

CAUTION

TO AVOID THE RISK OF FIRE THIS DRYER MUST BE EXHAUSTED OUTDOORS.

W928

WARNING

To reduce the risk of serious injury: Avoid contact with hot surfaces.

W927

WARNING

Electrical shock hazard can cause death or serious injury. To reduce the risk of electric shock, disconnect all electric power to appliance and accessories before servicing.

W929

WARNING

Moving parts hazard can cause serious injury. Disconnect electric power to unit before servicing. Unexpected start of machinery will occur if the unit is equipped with the extended tumble feature.

W937

WARNING

Lint compartment must be cleaned daily

To avoid the risk of fire:

- **Use for drying water washed fabrics only.**
- **DO NOT dry articles containing foam rubber, plastic, or similarly textured rubber like materials.**
- **DO NOT put articles soiled with cooking oil in dryer as cooking oil may not be removed during washing. Due to the remaining oil the fabric may catch on fire by itself.**
- **DO NOT put articles soiled with flammable liquids or flammable cleaning solvents in dryer.**

W930

CAUTION

- **Risk of fire, a clothes dryer produces combustible lint. Exhaust outdoors. Care should be taken to prevent the accumulation of lint around the exhaust opening and in the surrounding area.**
- **DO NOT reach into the dryer until all moving parts have stopped.**
- **DO NOT let children play on or in the dryer.**

W931

In Australia and New Zealand:

© Published by permission of the copyright owner - DO NOT COPY or TRANSMIT

WARNING

- **DO NOT operate this appliance before reading the instruction booklet.**
- **DO NOT place articles on or against this appliance.**
- **DO NOT store chemicals or flammable materials or spray aerosols near this appliance.**
- **DO NOT operate with panels, covers or guards removed from this appliance.**
- **DO NOT load materials containing flammable solvents into this appliance.**
- **If repeated ignition reset is required, the dryer should not be used and a service call booked.**

Risk of fire/flammable material.

W926

The following information applies to the state of Massachusetts, USA.

- This appliance can only be installed by a Massachusetts licensed plumber or gas fitter.
- This appliance must be installed with a 36 inch [91 cm] long flexible gas connector.
- A “T-Handle” type gas shut-off valve must be installed in the gas supply line to this appliance.
- This appliance must not be installed in a bedroom or bathroom.

Regulatory Statements

PRODUCT COMPLIANCE

Users of this product are cautioned not to make modifications or changes that are not approved by Alliance Laundry Systems, LLC. Doing so may void the compliance of this product with applicable laws and regulatory requirements and may result in the loss of the user’s authority to operate the equipment.

UNITED STATES

This device complies with Part 15 of the FCC Rules. Operation is subject to the following two conditions; (1) This device may not cause harmful interference, and (2) this device must accept any interference received, including interference that may cause undesired operation.

This equipment has been tested and found to comply with the limits for a Class B digital device, pursuant to Part 15 of the FCC Rules. These limits are designed to provide reasonable protection against harmful interference in a residential installation. This equipment generates uses and can radiate radio frequency energy and, if not installed and used in accordance with the instructions, may cause harmful interference to radio communications. However, there is no guarantee that interference will not occur in a particular installation. If this equipment does cause harmful interference to radio or television reception, which can be determined by turning the equipment off and on, the user is encouraged to try to correct the interference by one or more of the following measures:

- Reorient or relocate the radio or television receiving antenna.
- Increase the separation between the computer equipment or receiver.
- Connect the equipment into an outlet on a circuit different from that to which the radio or television receiver is connected.
- Consult the dealer or experienced radio television technician for help.

CAUTION

To comply with the limits of the Class B device, pursuant to Part 15 of the FCC Rules, this device is to comply with Class B limits. All peripherals must be shielded and grounded. Operation with non-certified peripherals or non-shielded cables is likely to result in interference and reception of the device.

W1004

Radiation Exposure Statement : This equipment complies with FCC radiation exposure limits set forth for an uncontrolled environment. The radio installed in this equipment and is intended to operate with minimum distance 20cm between the radiator and your body.

Limited Channels Fixed For Use In USA : IEEE 802.11b or 802.11g or 802.11n(HT20) operation of this product in the U.S. is firmware-limited to Channel 1 through 11.

CANADA - CAN ICES-3(B)/NMB-3(B)

This device contains license-exempt transmitter(s)/receiver(s) that comply with Innovation, Science and Economic Development Canada’s license-exempt RSS(s) standards. Operation is subject to the following two conditions:

- This device may not cause interference.
- This device must accept any interference, including interference that may cause undesired operation of the device.

Radiation Exposure Statement: This equipment complies with Innovation, Science and Economic Development Canada’s radiation exposure limits set forth for in RSS-102. The radio installed in this equipment is installed and is intended to operate with minimum distance 20cm between the radiator and your body.

EUROPE

Products bearing the CE mark comply with the following EU directives:

- EMC Directive 2014/30/EU

© Published by permission of the copyright owner - DO NOT COPY or TRANSMIT

- Machinery Directive 2006/42/EC
- Gas Appliance Directive 2016/426/EU
- RoHS Directive 2011/65/EU and its amendment directives; Commission Delegated Directive 2015/863 to restrict four phthalates

If the product has telecommunications functionality, it also complies with the requirements of the following EU directive:

- Radio Equipment Directive 2014/53/EU

Compliance with these Directives implies conformity to harmonized European standards that are noted in the EU Declaration of Conformity which is available upon request.

Alliance Laundry Systems products comply with the requirement of Article 12 as it can be operated in at least one Member State as examined and the product is compliant with Article 11 as it has no restrictions on putting into service in all EU member states.

This device contains a 2.4GHz transceiver, intended for indoor use only in all EU member states, EFTA states, and Switzerland. Attention has been given to allowed operational frequencies. For detailed information concerning installations in France, the user should contact the national spectrum authority in France (http://www.arcep.fr/)

Be aware that outdoor installations require special attention and will only be handled by trained and qualified installation personnel. No one from the general-public is permitted to install wireless products outdoors when external antennas, power and grounding must be installed for use.

AUSTRALIA/NEW ZEALAND

The radio in this equipment complies with and is certified to the Australian and New Zealand regulatory requirements.

BRAZIL ANATEL

This device is not entitled to protection against harmful interference and may not interfere with duly authorized systems.

CHINA SRRC

The radio device has recieved certification of conformance in accordance with the People's Republic of China State Radio Regulation Committee (SRRC) certification scheme. Integrations of this radio into a final product does not require additional radio certification provided installation instructions are followed. No changes are authorized to the radio or the antenna of the approved device.

JAPAN

This product is equipped with a certified wireless device pursuant to Article 2-1-19 of the Certification Ordinance. No changes are authorized to the radio or the antenna of the approved device.

MEXICO IFETEL

“The operation of this equipment is subject to the following two conditions: (1) it is possible that this equipment or device does not cause harmful interference and (2) this equipment or device must accept any interference, including that which may cause its unwanted operation.”

SOUTH KOREA (KC)

The radio device has received certification of conformance in accordance with the Radio Waves Act. Integration of this radio into a final product does not require additional radio certification provided installation instructions are followed. No changes are authorized to the radio or the antenna of the approved device.

TAIWAN

The information in this section applies to products bearing the Taiwan National Communications Commission mark:

This telecom equipment has complied with NCC regulations.

According to “Administrative Regulations of Low Power Radio Waves Radiated Devices:

Article 12 The low-power radio-frequency devices must not be altered by changing the frequency, enhancing emission power, adding external antenna, and modification of original design characteristic as well as function.

Article 14 The operation of the low-power radio-frequency devices is subject to the conditions that no harmful interference is caused. The user must stop operating the device immediately should harmful interference is caused and shall not resume until the condition causing the harmful interference has been corrected.

Moreover, the interference must be accepted that may be caused by the operation of an authorized communications, or ISM equipment. (1) Precautions (marked in the product manual and on outer packaging)

THAILAND

The information in this section applies to products approved by the Thailand National Communications Commission:

These telecommunication and device are compliance with the requirements of National Broadcasting and Telecommunication Commission.

Manufacturing Date

The manufacturing date for your unit can be found on the serial number. The first two digits indicate the year. The third and fourth digits indicate the month. For example, a unit with serial number 1505000001 was manufactured in May 2015.

© Published by permission of the copyright owner - DO NOT COPY or TRANSMIT

China Restriction of hazardous substances (RoHS)

The Table of Hazardous Substances/Elements and their Content

As required by China's Management Methods for Restricted Use of Hazardous Substances in Electrical and Electronic Products

Hazardous substances						
Part Name	Lead (Pb)	Mercury (Hg)	Cadmium (Cd)	Hexavalent Chromium (CR[VI])	Polybrominated biphenyls (PBB)	Polybrominated diphenyl ethers (PBDE)
PCBs	X	O	O	O	O	O
Electromechanical Parts	O	O	O	O	O	O
Cables and Wires	O	O	O	O	O	O
Metal Parts	O	O	O	O	O	O
Plastic Parts	O	O	O	O	O	O
Batteries	O	O	O	O	O	O
Textile	O	O	O	O	O	O
Timing Belts	O	O	O	O	O	O
Insulation	O	O	O	O	O	O
Glass	O	O	O	O	O	O
Display	O	O	O	O	O	O

This table is prepared in accordance with the provisions of SJ/T-11364.

O: Indicates that the content of said hazardous substance in all of the homogenous materials in the component is within the limits required by GB/T 26572.

X: Indicates that the content of said hazardous substance exceeds the limits required by GB/T 26572 in at least one homogenous material in the component.

All parts named in this table with an "X" are in compliance with the European Union's RoHS Legislation.

NOTE: The referenced Environmental Protection Use Period Marking was determined according to normal operating use conditions of the product such as temperature and humidity.

This product under normal use, durable years of environmental protection is 15 years.

© Published by permission of the copyright owner - DO NOT COPY or TRANSMIT

Safety Information

Important Safety Instructions

WARNING

To reduce the risk of fire, electric shock, serious injury or death to persons when using your tumble dryer, follow these basic precautions.

W776R1

Save These Instructions

- Read all instructions before using the tumble dryer.
- Install the tumble dryer according to the INSTALLATION instructions. Refer to the EARTHING (grounding) instructions for the proper earthing (grounding) of the tumble dryer. All connections for electrical power, earthing (grounding) and gas supply must comply with local codes and be made by licensed personnel when required. It is recommended that the machine be installed by qualified technicians.
- Do not install or store the tumble dryer where it will be exposed to water and/or weather. The tumble dryer cannot be used in a closed room where the air supply is insufficient. If necessary, ventilation grids must be installed in the doors or the windows.
- This tumble dryer must not be activated without lint screen filter.
- When you perceive a gas odor, immediately shut off the gas supply and ventilate the room. Do not power on electrical appliances and do not pull electrical switches. Do not use matches or lighters. Do not use a phone in the building. Warn the installer, and if so desired, the gas company, as soon as possible.
- To avoid fire and explosion, keep surrounding areas free of flammable and combustible products. Regularly clean the cylinder and exhaust tube should be cleaned periodically by competent maintenance personnel. Daily remove debris from lint screen filter and inside of filter compartment.
- Do not use or store flammable materials near this appliance.
- Do not place into tumble dryer articles that have been previously cleaned in, washed in, soaked in or spotted with gasoline or machine oils, vegetable or cooking oils, cleaning waxes or chemicals, dry-cleaning solvents, thinner or other flammable or explosive substances as they give off vapors that could ignite, explode or cause fabric to catch on fire by itself.
- Do not spray aerosols in the vicinity of this appliance while it is in operation.
- Items such as foam rubber (latex foam), shower caps, waterproof textiles, rubber backed articles and clothes or pillows filled with foam rubber pads should not be dried in the tumble dryer. Do not use the appliance to dry materials with a low melting temperature (PVC, rubber, etc.).
- Do not tumble fiberglass curtains and draperies unless the label says it can be done. If they are dried, wipe out the cylinder with a damp cloth to remove particles of fiberglass.
- Do not allow children to play on or in the dryer. Close supervision of children is necessary when the dryer is used near children. This appliance is not intended for use by persons (including children) with reduced physical, sensory or mental capabilities, or lack of experience and knowledge, unless they have been given supervision or instruction concerning the use of the appliance by a person responsible for their safety. This is a safety rule for all appliances.
- Cleaning and user maintenance shall not be made by children without supervision.
- Children less than three years should be kept away unless continuously supervised.
- Do not reach into the tumble dryer if the cylinder is revolving.
- Use tumble dryer only for its intended purpose, drying fabrics. Always follow the fabric care instructions supplied by the textile manufacturer and only use the dryer to dry textiles that have been washed in water. Only insert spin-dried linen in the dryer to avoid damage to dryer.
- Always read and follow manufacturer's instructions on packages of laundry and cleaning aids. Follow all warnings or precautions. To reduce the risk of poisoning or chemical burns, keep them out of the reach of children at all times (preferably in a locked cabinet).
- Do not use fabric softeners or products to eliminate static unless recommended by the manufacturer of the fabric softener or product.
- Remove laundry immediately after tumble dryer stops.
- DO NOT operate the tumble dryer if it is smoking, grinding or has missing or broken parts or removed guards or panels. DO NOT tamper with the controls or bypass any safety devices.
- Tumble dryer will not operate with the loading door open. DO NOT bypass the door safety switch to permit the tumble dryer to operate with the door open. The tumble dryer will stop rotating when the door is opened. Do not use the tumble dryer if it does not stop rotating when the door is opened or starts tumbling without pressing the START mechanism. Remove the tumble dryer from use and call for service.
- Tumble dryer will not operate with lint panel open. DO NOT bypass lint panel door safety switch to permit the tumble dryer to operate with the lint panel door open.
- Do not alter this tumble dryer from factory construction except as otherwise described in the technical instructions.
- Always clean the lint filter daily. Keep area around the exhaust opening and adjacent surrounding area free from the accumulation of lint, dust and dirt. The interior of the tumble dryer and the exhaust duct should be cleaned periodically by qualified service personnel.
- Solvent vapors from dry-cleaning machines create acids when drawn through the heater of the drying unit. These acids are corrosive to the tumble dryer as well as the laundry load being dried. Be sure make-up air is free of solvent vapors.

© Published by permission of the copyright owner - DO NOT COPY or TRANSMIT

- At the end of each working day, close off all main supplies of gas, steam and electricity.

  IMPORTANT: For fire suppression equipped tumble dryers, electricity and water should NOT be turned off.
- Do not repair or replace any part of the tumble dryer, or attempt any servicing unless specifically recommended in the user-maintenance instructions or in published user-repair instructions that the user understands and has the skills to carry out. ALWAYS disconnect and lockout the electrical power to the tumble dryer before servicing. Disconnect power by shutting off appropriate breaker or fuse.
- Activation of the emergency stop switch stops all tumble dryer control circuit functions, but DOES NOT remove all electrical power from tumble dryer.
- Exhaust ductwork should be examined and cleaned annually after installation.
- Before the tumble dryer is removed from service or discarded, remove the door to the drying compartment and the door to the lint compartment.
- Failure to install, maintain, and/or operate this tumble dryer according to the manufacturer's instructions may result in conditions which can produce bodily injury and/or property damage.

NOTE: The WARNINGS and IMPORTANT SAFETY INSTRUCTIONS appearing in this manual are not meant to cover all possible conditions and situations that may occur. Observe and be aware of other labels and precautions that are located on the machine. They are intended to provide instruction for safe use of the machine. Common sense, caution and care must be exercised when installing, maintaining, or operating the tumble dryer.

Always contact your dealer, distributor, service agent or the manufacturer about any problems or conditions you do not understand.

NOTE: All appliances are produced according to the EMC-directive (Electro-Magnetic-Compatibility). They can be used in restricted surroundings only (comply minimally with class A requirements). For safety reasons there must be kept the necessary precaution distances with sensitive electrical or electronic device(s). These machines are not intended for domestic use by private consumers in the home environment.

Explanation of Safety Messages

Precautionary statements ("DANGER," "WARNING," and "CAUTION"), followed by specific instructions, are found in this manual and on machine decals. These precautions are intended for the personal safety of the operator, user, servicer, and those maintaining the machine.

DANGER

Indicates an imminently hazardous situation that, if not avoided, will cause severe personal injury or death.

WARNING

Indicates a hazardous situation that, if not avoided, could cause severe personal injury or death.

CAUTION

Indicates a hazardous situation that, if not avoided, may cause minor or moderate personal injury or property damage.

Additional precautionary statements ("IMPORTANT" and "NOTE") are followed by specific instructions.

IMPORTANT: The word "IMPORTANT" is used to inform the reader of specific procedures where minor machine damage will occur if the procedure is not followed.

NOTE: The word "NOTE" is used to communicate installation, operation, maintenance or servicing information that is important but not hazard related.

© Published by permission of the copyright owner - DO NOT COPY or TRANSMIT

Table of Contents

Safety Information **8**
Important Safety Instructions 8
Explanation of Safety Messages 9

Introduction **12**
Machine Identification 12
Contact Information 14

Specifications and Dimensions **16**
Specifications and Dimensions 16
Cabinet Dimensions and Exhaust Outlet Locations 18
Electric and Gas Connection Locations for Gas Models 20
Electric and Steam Connection Locations for Steam Models 21
Electric Connection Location for Electric Models 23

Installation **24**
Pre-Installation Inspection 24
Location Requirements 24
Remove Shipping Materials 25
Position and Level the Tumble Dryer 26
Mounting 26
Fire Suppression System (Optional Equipment) 26
Check Local Codes and Permits 26
Water Requirements 26
Water Connections 27
Electrical Requirements 28
Auxiliary Alarm 28
Before Placing Tumble Dryer into Service 29
Required for IEC Models Only 30

Exhaust Requirements **31**
Exhaust Requirements 31
Layout 31
Make-Up Air 31
Venting 31
Individual Venting 33
Manifold Venting 34

Gas Requirements **37**
Gas Requirements 37
How to Change Burner Orifice Size 40

© Published by permission of the copyright owner.
All rights reserved. No part of the contents of this book may be reproduced or transmitted in any form or by any means without the expressed written consent of the publisher.

How to Adjust Gas Valve Governor/Regulator..... 41
Installing CE Gas Tumble Dryer.....42
Adjusting Manifold Pressure for Natural Gas G20 or G25..... 42
Adjusting Supply Pressure for L.P.G. G30 or G31.....42
Converting From Natural Gas to L.P.G. or From Unregulated L.P.G. to Regulated L.P.G.....42
Start-Up Procedure.....42
Gas Supply Pipe Sizing and Looping..... 43
Low Pressure Gas Pipe Sizes.....44
High Pressure Gas Pipe Sizes..... 46
High Altitude Orifice Sizing..... 48

Electrical Requirements.....52
Electrical Requirements.....52
Wiring Diagram.....52
Grounding Instructions.....52
For On Premises Laundry (OPL) Models Only.....53
Service/Ground Location..... 53
To Connect Electrical Service To The Tumble Dryer..... 54
Electrical Specifications..... 55

Steam Requirements..... 58
Steam Requirements.....58
Piping Recommendations..... 62
Installing Steam Trap and Making Condensate Return Connections.....62

Adjustments..... 63
Adjustments..... 63
Gas Burner Air Shutter.....63
Airflow Switch..... 64
Loading Door Switch..... 64
Loading Door Catch.....64
Manual Resettable Thermostat..... 65
Belt Drive..... 65
Upper Belt Tension.....65
Lower Belt Tension..... 66

Before You Call for Service..... 67

Removing Tumble Dryer from Service..... 68

Disposal of Unit..... 69

© Published by permission of the copyright owner -
DO NOT COPY or TRANSMIT

Introduction

Machine Identification

Information in this manual is applicable to these machines. **Refer to the serial plate.**

120 Series (120 lb / 55 Kg)							
BA120E	BU120L	HA120E	HU120E	NK120N	PJ120S	SH120N	UG120L
BA120L	BU120N	HA120L	HU120L	NR120E	PK120E	SH120S	UG120N
BA120N	BU120S	HA120N	HU120N	NR120S	PK120L	SJ120E	UG120S
BA120S	GA120E	HA120S	HU120S	NT120E	PK120N	SJ120L	UH120E
BG120E	GA120L	HG120E	KT120E	NT120L	PR120E	SJ120N	UH120L
BG120L	GA120N	HG120L	KT120L	NT120N	PR120S	SJ120S	UH120N
BG120N	GA120S	HG120N	KT120N	NT120S	PT120C	SK120E	UH120S
BG120S	GG120E	HG120S	KT120S	NU120E	PT120E	SK120L	UJ120E
BH120E	GG120L	HH120E	NA120E	NU120L	PT120L	SK120N	UJ120L
BH120L	GG120N	HH120L	NA120L	NU120N	PT120N	SR120E	UJ120N
BH120N	GG120S	HH120N	NA120N	NU120S	PT120S	SR120S	UJ120S
BH120S	GH120E	HH120S	NA120S	PA120E	PU120E	ST120C	UK120E
BJ120E	GH120L	HJ120E	NG120E	PA120L	PU120L	ST120E	UK120L
BJ120L	GH120N	HJ120L	NG120L	PA120N	PU120N	ST120L	UK120N
BJ120N	GH120S	HJ120N	NG120N	PA120S	PU120S	ST120N	UR120E
BJ120S	GJ120E	HJ120S	NG120S	PG120E	SA120E	ST120S	UR120S
BK120E	GJ120L	HK120E	NH120E	PG120L	SA120L	SU120E	UT120C
BK120L	GJ120N	HK120L	NH120L	PG120N	SA120N	SU120L	UT120E
BK120N	GJ120S	HK120N	NH120N	PG120S	SA120S	SU120N	UT120L
BR120E	GK120E	HR120E	NH120S	PH120E	SG120E	SU120S	UT120N
BR120S	GK120L	HR120S	NJ120E	PH120L	SG120L	UA120E	UT120S
BT120E	GK120N	HT120C	NJ120L	PH120N	SG120N	UA120L	UU120E
BT120L	GU120E	HT120E	NJ120N	PH120S	SG120S	UA120N	UU120L
BT120N	GU120L	HT120L	NJ120S	PJ120E	SH120E	UA120S	UU120N
BT120S	GU120N	HT120N	NK120E	PJ120L	SH120L	UG120E	UU120S
BU120E	GU120S	HT120S	NK120L	PJ120N			

© Published by permission of the copyright owner - DO NOT COPY or TRANSMIT

170 Series (170 lb / 77 Kg)							
BA170L	BU170N	HA170L	HU170L	NK170N	PJ170S	SH170S	UG170N
BA170N	BU170S	HA170N	HU170N	NR170S	PK170L	SJ170L	UG170S
BA170S	GA170L	HA170S	HU170S	NT170L	PK170N	SJ170N	UH170L
BG170L	GA170N	HG170L	KT170L	NT170N	PR170S	SJ170S	UH170N
BG170N	GA170S	HG170N	KT170N	NT170S	PT170C	SK170L	UH170S
BG170S	GG170L	HG170S	KT170S	NU170L	PT170L	SK170N	UJ170L
BH170L	GG170N	HH170L	NA170L	NU170N	PT170N	SR170S	UJ170N
BH170N	GG170S	HH170N	NA170N	NU170S	PT170S	ST170C	UJ170S
BH170S	GH170L	HH170S	NA170S	PA170L	PU170L	ST170L	UK170L
BJ170L	GH170N	HJ170L	NG170L	PA170N	PU170N	ST170N	UK170N
BJ170N	GH170S	HJ170N	NG170N	PA170S	PU170S	ST170S	UR170S
BJ170S	GJ170L	HJ170S	NG170S	PG170L	SA170L	SU170L	UT170C
BK170L	GJ170N	HK170L	NH170L	PG170N	SA170N	SU170N	UT170L
BK170N	GJ170S	HK170N	NH170N	PG170S	SA170S	SU170S	UT170N
BR170S	GK170L	HR170S	NH170S	PH170L	SG170L	UA170L	UT170S
BT170L	GK170N	HT170C	NJ170L	PH170N	SG170N	UA170N	UU170L
BT170N	GU170L	HT170L	NJ170N	PH170S	SG170S	UA170S	UU170N
BT170S	GU170N	HT170N	NJ170S	PJ170L	SH170L	UG170L	UU170S
BU170L	GU170S	HT170S	NK170L	PJ170N	SH170N		

© Published by permission of the copyright owner -
DO NOT COPY or TRANSMIT

200 Series (200 lb / 90 Kg)							
BA200L	BU200N	HA200L	HU200L	NK200N	PJ200S	SH200S	UG200N
BA200N	BU200S	HA200N	HU200N	NR200S	PK200L	SJ200L	UG200S
BA200S	GA200L	HA200S	HU200S	NT200L	PK200N	SJ200N	UH200L
BG200L	GA200N	HG200L	KT200L	NT200N	PR200S	SJ200S	UH200N
BG200N	GA200S	HG200N	KT200N	NT200S	PT200C	SK200L	UH200S
BG200S	GG200L	HG200S	KT200S	NU200L	PT200L	SK200N	UJ200L
BH200L	GG200N	HH200L	NA200L	NU200N	PT200N	SR200S	UJ200N
BH200N	GG200S	HH200N	NA200N	NU200S	PT200S	ST200C	UJ200S
BH200S	GH200L	HH200S	NA200S	PA200L	PU200L	ST200L	UK200L
BJ200L	GH200N	HJ200L	NG200L	PA200N	PU200N	ST200N	UK200N
BJ200N	GH200S	HJ200N	NG200N	PA200S	PU200S	ST200S	UR200S
BJ200S	GJ200L	HJ200S	NG200S	PG200L	SA200L	SU200L	UT200C
BK200L	GJ200N	HK200L	NH200L	PG200N	SA200N	SU200N	UT200L
BK200N	GJ200S	HK200N	NH200N	PG200S	SA200S	SU200S	UT200N
BR200S	GK200L	HR200S	NH200S	PH200L	SG200L	UA200L	UT200S
BT200L	GK200N	HT200C	NJ200L	PH200N	SG200N	UA200N	UU200L
BT200N	GU200L	HT200L	NJ200N	PH200S	SG200S	UA200S	UU200N
BT200S	GU200N	HT200N	NJ200S	PJ200L	SH200L	UG200L	UU200S
BU200L	GU200S	HT200S	NK200L	PJ200N	SH200N		

Heater Digit (Position 6)
C - Steam (CRN)
E - Electric
L - Liquid Petroleum (L.P.) Gas
N - Natural Gas
S - Steam

Contact Information

If service is required, contact the nearest Factory Authorized Service Center.

If you are unable to locate an authorized service center or are unsatisfied with the service performed on your unit, contact the source from which you purchased your unit.

When calling or writing about your unit, PLEASE GIVE THE MODEL AND SERIAL NUMBERS. The model and serial numbers are located on the serial plate. The serial plate will be in the location shown in *Figure 1* .

Date Purchased _____

Model Number _____

Serial Number _____

Please include a copy of your bill of sale and any service receipts you have.

© Published by permission of the copyright owner - DO NOT COPY or TRANSMIT

WARNING

To reduce the risk of serious injury or death, DO NOT repair or replace any part of the unit or attempt any servicing unless specifically recommended in the user-maintenance instructions or in published user-repair instructions that you understand and have the skills to carry out.

W329

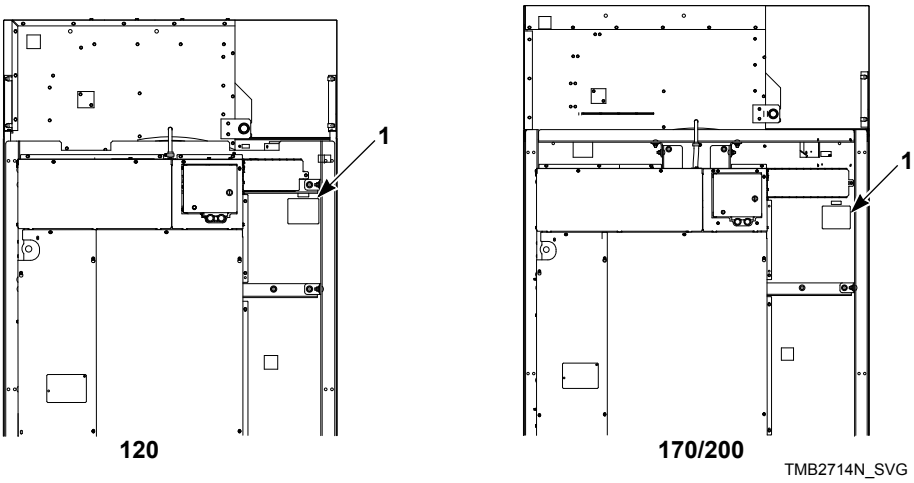

NOTE: An alternate serial plate is located on the front of the machine on the inside of the loading door hinge.

1. Serial Plate

Figure 1

If replacement parts are required, contact the source from where you purchased your unit.

© Published by permission of the copyright owner - DO NOT COPY or TRANSMIT

Specifications and Dimensions

Specifications and Dimensions

Refer to machine serial plate for additional specifications.

Specifications	120 Series	170 Series	200 Series
Weights and Shipping Information			
Net Weight (approximate): Pounds [Kilograms]	Gas 1220 [555] Steam 1330 [605] Electric 1250 [565]	Gas 1400 [635] Steam 1550 [705]	Gas 1550 [705] Steam 1700 [770]
Standard Packaging Weight: Pounds [Kilograms]	Gas 1290 [585] Steam 1400 [635] Electric 1320 [600]	Gas 1480 [670] Steam 1630 [740]	Gas 1630 [740] Steam 1780 [805]
Slat Crate Packaging Weight: Pounds [Kilograms]	Gas 1460 [660] Steam 1570 [710] Electric 1490 [675]	Gas 1670 [755] Steam 1820 [825]	Gas 1820 [825] Steam 1970 [895]
Standard Packaging Shipping Dimensions: Inches [Millimeters]	48.0 x 71.5 x 90.0 [1220 x 1820 x 2290]	52.1 x 73.8 x 99.0 [1320 x 1870 x 2510]	52.1 x 81.3 x 99.0 [1320 x 2070 x 2510]
Standard Packaging Shipping Volume: ft^3 [m^3]	179 [5.1]	220 [6.2]	243 [6.9]
Slat Crate Packagine Shipping Dimensions: Inches [Millimeters]	53.0 x 74.5 x 90.9 [1350 x 1890 x 2310]	60.1 x 76.8 x 100.3 [1530 x 1950 x 2550]	60.1 x 84.3 x 100.3 [1530 x 2140 x 2550]
Slat Crate Packaging Shipping Volume: ft^3 [m^3]	208 [5.9]	268 [7.6]	294 [8.3]
Cylinder Information			
Cylinder Size: Inches [mm]	44.0 x 41.0 [1120 x 1040]	50.8 x 42.5 [1290 x 1080]	50.8 x 50.0 [1290 x 1270]
Cylinder Capacity dry weight: Pounds [kg]	120 [55]	170 [77]	200 [90]
Cylinder Volume: ft^3 [liter]	36.1 [1020]	49.8 [1410]	58.6 [1660]
Operational Information			
Cylinder Motor: HP [kW]	1.5 [1.1]	1.5 [1.1]	1.5 [1.1]
Fan Motor: HP [kW]	1.5 [1.1]	1.5 [1.1]	1.5 [1.1]
Air Outlet Diameter: Inches [mm]	10.0 [254]	12.0 [305]	12.0 [305]

Table continues...

© Published by permission of the copyright owner - DO NOT COPY or TRANSMIT

Specifications	120 Series	170 Series	200 Series
Maximum Static Back Pressure: W.C.I. [mbar, kPa]	0.80 [2.0, 0.20]	0.80 [2.0, 0.20]	0.80 [2.0, 0.20]
Minimum Static Back Pressure: W.C.I. [Millibar, kPa]	0.0 [0.0, 0.0]	0.0 [0.0, 0.0]	0.0 [0.0, 0.0]
Maximum Airflow: C.F.M. [L/sec.]	1400 [660]	2150 [1,010]	2150 [1,010]
Heat dissipation of surface area exposed to conditioned air: Btu/ft ^{2} [Joules/m ^{2}]	60 [680,000]	60 [680,000]	60 [680,000]
Noise level measured during operation at operator position of 3.3 feet [1 meter] in front of machine and 5.2 feet [1.6 meters] from floor.	60 dBA	69 dBA	69 dBA
Door Opening Information			
Door Opening Diameter: Inches [Millimeter]	27.0 [686]	27.0 [686]	27.0 [686]
Door Hinge Side	Right	Right	Right
Door Maximum Open Angle: Degrees	180	180	180
Gas Models			
Gas Connection	1 NPT	1 NPT	1 NPT
Gas Burner Rating: Btu/hr. [kW, Mj/hr.]	270,000 [79, 290]	395,000 [116, 417]	425,000 [125, 448]
Steam Models			
Steam Connection	3/4 NPT inlet 3/4 NPT outlet	3/4 NPT inlet 1 NPT outlet	3/4 NPT inlet 1 NPT outlet
Steam Coil Rating at 100 psig: Btu/hr. [kg/hr.] (recommended operating pressure 80-100 psig)	187,500 [88.8]	265,500 [125.7]	265,500 [125.7]
Electric Models			
Heating Element Rating: Kilowatts (kW)	60	Not Applicable	Not Applicable

NOTE: All IEC machines are shipped with an adapter to convert the gas connection threads to BSPT (from NPT).

© Published by permission of the copyright owner - DO NOT COPY or TRANSMIT

Cabinet Dimensions and Exhaust Outlet Locations

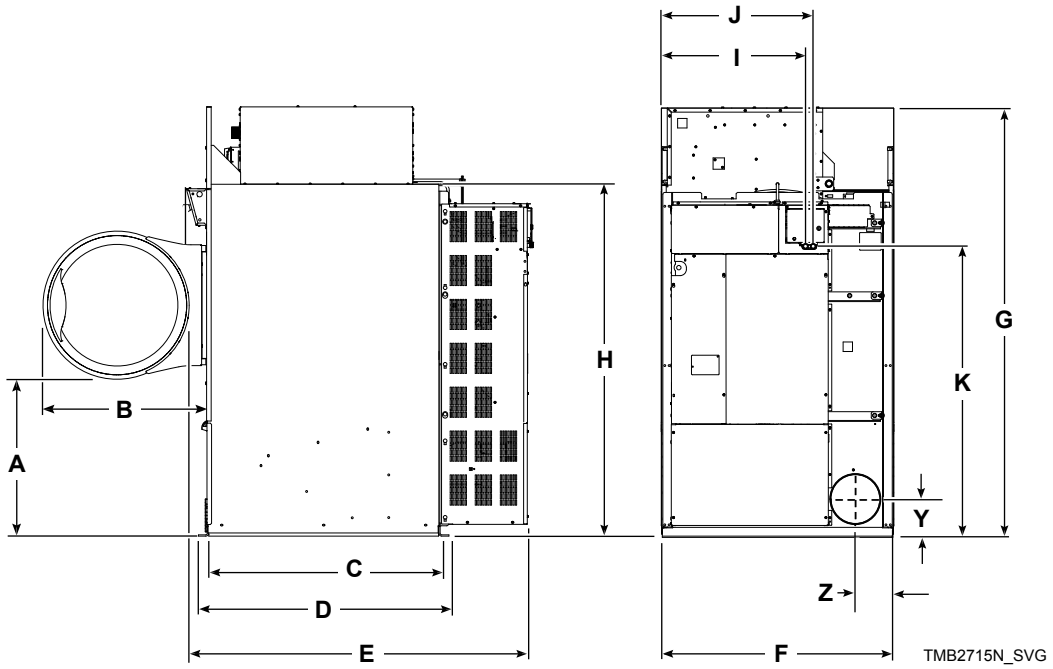

Cabinet Dimensions, in. [mm]					
Models	**A**	**B**	**C**	**D**	**E**
120	31.6 [800]	32.5 [825]	46.5 [1180]	49.9 [1270]	68.0 [1725]
170	33.9 [860]	32.5 [825]	48.3 [1125]	51.8 [1315]	69.8 [1775]
200	33.8 [860]	32.5 [825]	55.8 [1420]	59.3 [1505]	74.9 [1900]

Cabinet Dimensions, in. [mm]						
Models	**F**	**G**	**H**	**I***	**J***	**K***
120	46.4 [1180]	85.7 [2175]	70.2 [1785]	28.8 [730]	30.3 [770]	58.0 [1475]
170	53.2 [1350]	94.0 [2390]	75.0 [1905]	32.9 [835]	34.4 [875]	60.8 [1545]
200	53.2 [1350]	94.0 [2390]	75.0 [1905]	32.9 [835]	34.4 [875]	60.8 [1545]

* Fire suppression system optional - may not be on machine.

Refer to Position and Level the Tumble Dryer to temporarily reduce the heights of these models.

Rear Exhaust Dimensions, in. [mm]			
Models	**Diameter**	**Y**	**Z**

Table continues...

© Published by permission of the copyright owner - DO NOT COPY or TRANSMIT

Rear Exhaust Dimensions, in. [mm]			
120	10.0 [250]	7.6 [195]	7.6 [195]
170	12.0 [305]	8.8 [225]	11.0 [280]
200	12.0 [305]	8.8 [225]	11.0 [280]

© Published by permission of the copyright owner -
DO NOT COPY or TRANSMIT

Electric and Gas Connection Locations for Gas Models

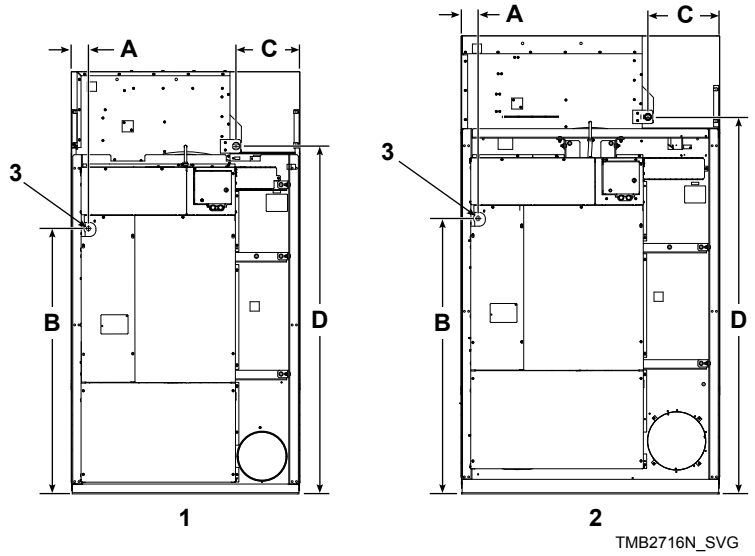

1. 120
2. 170 and 200
3. Electrical Connection 0.875 in. [22 mm] Diameter

Models	Electrical Connection, in. [mm]		Gas Connection, in. [mm]		
	A	B	C	D	Diameter
120	3.4 [85]	53.8 [1365]	12.9 [330]	70.2 [1785]	1 NPT
170	3.4 [85]	56.5 [1435]	14.6 [370]	77.4 [1965]	1 NPT
200	3.4 [85]	56.5 [1435]	14.6 [370]	77.4 [1965]	1 NPT

© Published by permission of the copyright owner -
DO NOT COPY or TRANSMIT

Electric and Steam Connection Locations for Steam Models

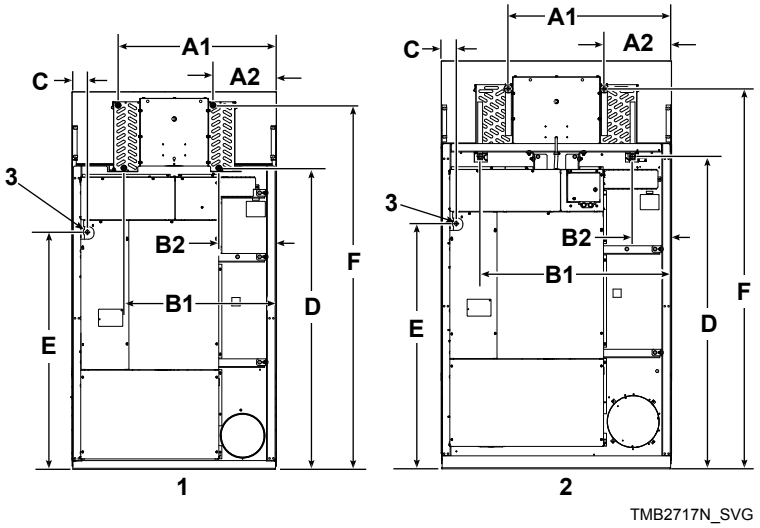

1. 120
2. 170 and 200
3. Electrical Connection 0.875 in. [22 mm] Diameter

Models	Steam Inlet, in. [mm]			
	Diameter	A1	A2	F
120	3/4 NPT	35.9 [910]	14.3 [365]	82.5 [2095]
170	3/4 NPT	37.6 [955]	15.5 [395]	87.6 [2225]
200	3/4 NPT	37.6 [955]	15.5 [395]	87.6 [2225]

Models	Steam Outlet, in. [mm]			
	Diameter	B1	B2	D
120	3/4 NPT	34.6 [880]	13.1 [335]	68.5 [1740]
170	1 NPT	44.0 [1120]	9.0 [230]	72.0 [1830]
200	1 NPT	44.0 [1120]	9.0 [230]	72.0 [1830]

© Published by permission of the copyright owner - DO NOT COPY or TRANSMIT

Models	Electrical Connection, in. [mm]	
	C	E
120	3.4 [85]	53.8 [1365]
170	3.4 [85]	56.5 [1435]
200	3.4 [85]	56.5 [1435]

© Published by permission of the copyright owner -
DO NOT COPY or TRANSMIT

Electric Connection Location for Electric Models

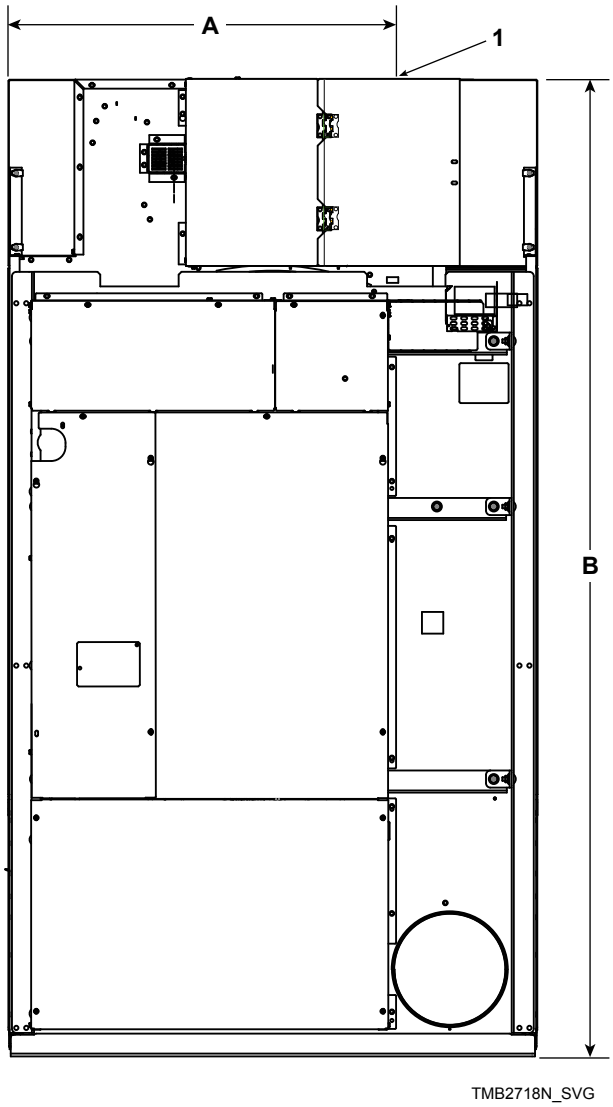

1. Electrical Connection 2.5 in. [64 mm] Diameter

Connection Dimensions, in. [mm]		
Models	**A**	**B**
120	36.4 [925]	85.6 [2175]

© Published by permission of the copyright owner - DO NOT COPY or TRANSMIT

Installation

Pre-Installation Inspection

Upon delivery, visually inspect the crate, carton and parts for any visible shipping damage. If the crate, carton, or cover is damaged or signs of possible damage are evident, have the carrier note the condition on the shipping papers before the shipping receipt is signed, or advise the carrier of the condition as soon as it is discovered.

Remove the crate and protective cover as soon as possible and check the items listed on the packing list. Advise the carrier of any damaged or missing articles as soon as possible. A written claim should be filed with the carrier immediately if articles are damaged or missing.

IMPORTANT: Remove the yellow shipping wire tie securing the airflow switch.

IMPORTANT: Warranty is void unless tumble dryer is installed according to instructions in this manual. Installation should comply with minimum specifications and requirements detailed in this manual and applicable local gas fitting regulations, municipal building codes, water supply regulations, electrical wiring regulations, and any other relevant statutory regulations. Due to varied requirements, applicable local codes should be thoroughly understood and all pre-installation work arranged for accordingly.

Materials Required (Obtain Locally)	
All Models	Circuit breaker on 3 Phase models.

Table continues...

Materials Required (Obtain Locally)	
Steam Models	One steam shut-off valve for steam service line to be connected upstream of solenoid steam valve. Two steam shut-off valves for each condensate return line. Flexible steam hoses with a 125 psig [pounds per square inch gauge] [862 kPa] working pressure for connecting steam coils. Refer to *Figure 16* and *Figure 17* for sizing and connection configurations. Two steam traps for steam coil outlets to condensate return line. Optional – Two vacuum breakers for condensate return lines.

IMPORTANT: 3 Phase Only – Each tumble dryer must be connected to its own individual branch circuit breaker, not fuses, to avoid the possibility of "single phasing" and causing premature failure of the motor(s).

Location Requirements

The machine must be installed on a level floor. Floor covering materials such as carpeting or tile should be removed.

To assure compliance, consult local building code requirements. The machine must not be installed or stored in area where it will be exposed to water and/or weather.

IMPORTANT: DO NOT block the airflow at the rear of the machine with laundry or other articles. Doing so would prevent adequate air supply to the combustion chamber of the machine.

A typical machine enclosure is shown in *Figure 2* .

IMPORTANT: Install machines with sufficient clearance for servicing and operation, refer to *Figure 2* .

IMPORTANT: The machine must not be installed behind a lockable door, a sliding door or a door with a hinge on the opposite side to that of the machine, in such a way that a full opening of the machine door is restricted.

© Published by permission of the copyright owner - DO NOT COPY or TRANSMIT

WARNING

To reduce the risk of severe injury, clearance of tumble dryer cabinet from combustible construction must conform to the minimum clearances, and/or local codes and ordinances.

W770R1

If rear of machine or water supply is located in an area where it will be exposed to cold/freezing temperatures, provisions must be made to protect these water lines from freezing.

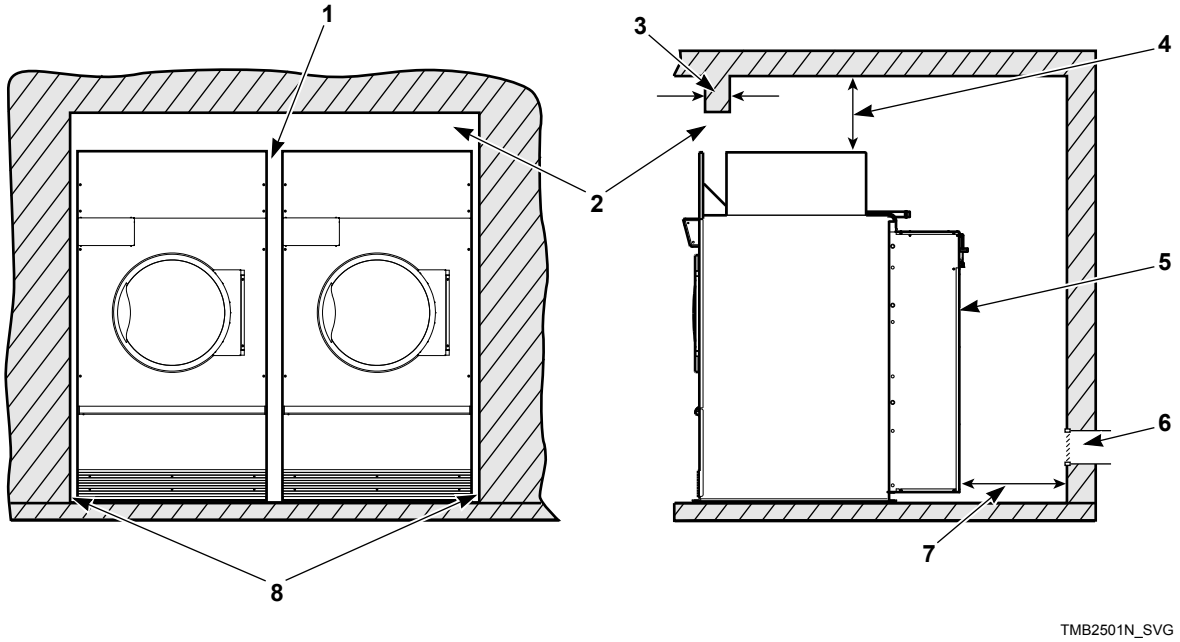

NOTE: Shaded areas indicate adjacent structure.

1. 0.0 in. [0 mm] minimum, 0.5 in. [13 mm] recommended between machines for removal or installation
2. Allow 2-4 in. [51-100 mm] opening at top of machine to aid in removal or installation. A removable trim piece may be used to conceal the opening; zero clearance allowed for trim.
3. 4 in. [100 mm] maximum header thickness
4. Minimum clearance permitted for remainder:

120 Gas/Electric	4.0 in. [100 mm]
120 Steam	12.0 in. [300 mm]
170/200 Gas	4.0 in. [100 mm]
170/200 Steam	12.0 in. [300 mm]

5. Guard
6. Provision for make-up air
7. 18 in. [460 mm] minimum, 36 in. [910 mm] recommended for maintenance purposes
8. 0.0 in. [0 mm] minimum, 0.25 in. [6 mm] recommended for removal or installation purposes

Figure 2

Remove Shipping Materials

IMPORTANT: Remove the yellow shipping wire tie securing the airflow switch.

Remove rear guard by unscrewing the screws using a 5/16 inch wrench. After the screws are removed, lift the panel off the positioning lugs located on the lower guard surface. Before removing the shipping bracket, install the belt over the drive motor pulley

© Published by permission of the copyright owner - DO NOT COPY or TRANSMIT

and the larger idler pulley. Center belt on pulleys. Remove the nuts from both ends holding the bracket in place and remove the shipping bracket from the tumble dryer. The belt will be tightened to the appropriate tension when the bracket is removed. Keep bracket in case machine ever needs to be relocated. Re-install rear guard.

Position and Level the Tumble Dryer

The tumble dryer may be moved with or without the skid. To remove the skid, unscrew the four shipping bolts, and discard them.

To fit a 170 and 200 tumble dryer (with shipping skid) through a 8.0 foot [2.4 meters] high door, you must remove the front access panel. The upper 3.0 inches [76 mm] of the gas heater must also be removed on 170 gas tumble dryers. Removing the entire gas or steam heater assembly and the shipping skid, will reduce the height of the 120 tumble dryer to 70 inches [1,780 mm] , and the 170 and 200 tumble dryer to 75 inches [1,910 mm] .

Level the tumble dryer to within 0.13 inch [3.3 mm] from front-to-rear (level on cylinder rib), and side-to-side (level on upper access panel top surface). Shim under corners to level and stabilize unit. Tumble dryer must not rock.

Mounting

Where local code requires the unit to be securely mounted, use the shipping bolt frame holes found on the tumble dryer frame. Use either epoxy 3/8 in. [10 mm] bolts or equivalent 3/8 in. [10 mm] concrete anchors, such as expandable bolts.

Fire Suppression System (Optional Equipment)

WARNING

ELECTRICAL SHOCK HAZARD. Electrical shock can result in death or serious injury. If the water dispensing system is activated, do not attempt to operate the tumble dryer. If the water dispensing system is activated, have the tumble dryer inspected by a qualified agency before operating the tumble dryer.

W879R1

IMPORTANT: Main supplies of electricity and water to the tumble dryer should remain on at all times for the fire suppression system to work.

Check Local Codes and Permits

Call your local water company or the proper municipal authority for information regarding local codes.

IMPORTANT: It is your responsibility to have ALL plumbing connections made by a qualified professional to assure that the plumbing is adequate and conforms to local, state, and federal regulations or codes.

IMPORTANT: It is the installation or owner's responsibility to confirm that the necessary or required water, water pressure, pipe size, or connections are provided. Manufacturer assumes no responsibility if the fire suppression system is not connected, installed, or maintained properly.

Water Requirements

IMPORTANT: Water must be supplied to the fire suppression system, or the fire suppression system will not operate as intended.

To ensure the fire suppression system operates properly:

- Water supply requirements: 3/4 inch hose connections providing 15 gpm [57 lpm] minimum flow; Water pressure 20 psi [138 kPa] minimum, 120 psi [827 kPa] maximum; water temperature 40°F [4.5°C] minimum, 120°F [49°C] maximum must be maintained at all times.
- Electric power to the tumble dryer must be provided at all times.
- Perform preventative maintenance checks every month. Refer to Operation/Maintenance Manual.

NOTE: Water pressure under 20 psi [138 kPa] will cause low flow at water solenoid valve.

If the rear of the tumble dryer or the water supply is located in an area where it will be exposed to cold/freezing temperatures, provisions must be made to protect these water lines from freezing.

IMPORTANT: Temperature of the water supply must be kept between 40°F and 120°F [4.5°C and 49°C] . If water in the supply line or water solenoid valve freezes, the fire suppression system will not operate.

IMPORTANT: If temperature sensors inside the tumble dryer register a temperature below 40F° [4.5°C] , the fire suppression system control will lock out. This feature protects against operation of the tumble dryer with a possible frozen water supply. Only when the temperature sensors register a temperature 40F° [4.5°C] or above will the machine reset for operation.

For installations where the tumble dryer must operate below 40°F [4.5°C] , a cold weather fire suppression system relocation kit (part no. 44340301) is available. Refer to the instructions provided in the kit for proper installation.

IMPORTANT: Flexible supply line/coupling must be used. Solenoid valve failure due to hard plumbing connections will void the warranty. It is recommended that a filter or strainer be installed in the water supply line.

© Published by permission of the copyright owner - DO NOT COPY or TRANSMIT

Water Connections

WARNING

Electrical shock hazard. Can cause death or serious injury. If the water dispensing system is activated do not attempt to operate the dryer. If the water dispensing system is activated have the dryer inspected by a qualified agency before operating the dryer.

- **CALL THE FIRE DEPARTMENT.**
- **DO NOT disconnect electric power to the dryer.**
- **DO NOT disconnect water to the dryer.**
- **DO NOT touch the dryer.**

W932

Connect tumble dryer to a backflow preventer (vacuum breaker) before connecting to the public water main in all countries where local regulations require specific water approval certificates.

Two hoses and a Y-connector are provided with the tumble dryer to allow for connection of water supply to tumble dryer. DO NOT reuse old hose sets.The water connections are made to the water solenoid valve, located on the rear of the tumble dryer. The Y-connector provides a single female hose connection (Standard US 3/4-11 1/2 NH thread). Refer to *Figure 3* and *Figure 4* .

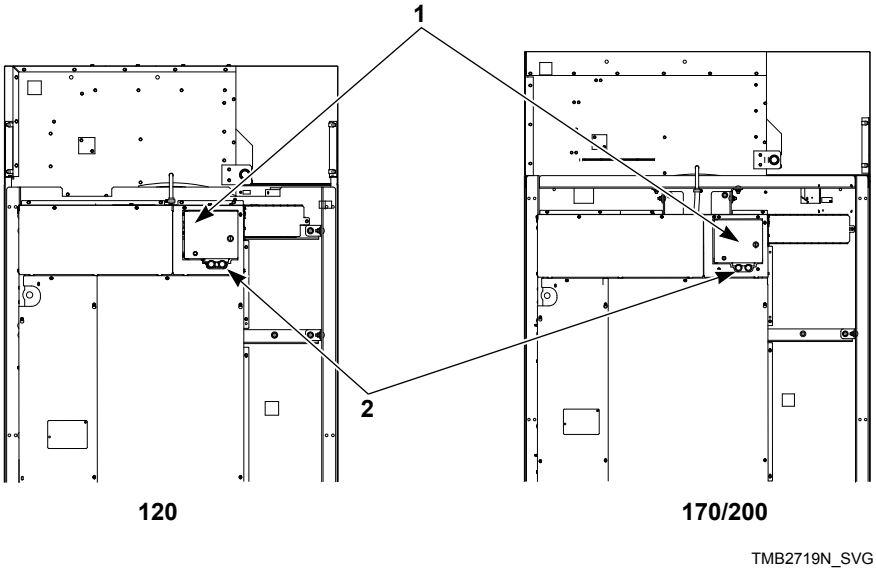

1. Fire Suppression System Control Box
2. Water Solenoid Valve

Figure 3

To connect the two hoses (supplied with tumble dryer), insert rubber washers (from literature pack) in water inlet hose couplings. Refer to *Figure 4* .

© Published by permission of the copyright owner - DO NOT COPY or TRANSMIT

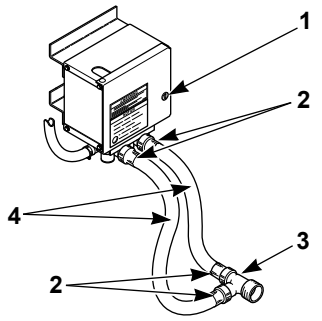

TMB2463N_SVG

1. Lock
2. Hose Couplings
3. Y-Connector
4. Inlet Hoses

Figure 4

Connect inlet hoses to water supply. Flush the lines for approximately two minutes to remove any foreign materials that could clog the screens in the water mixing valve. This is especially important when installing a tumble dryer in a newly constructed or renovated building. Then connect the hoses to the Y-connector; connect the Y-connector to the connections at the rear of the tumble dryer.

IMPORTANT: Thread hose couplings onto valve connections finger tight, then turn 1/4 turn with pliers. Do not cross thread or overtighten couplings.

IMPORTANT: Hoses and other natural rubber parts deteriorate after extended use. Hoses may develop cracks, blisters or material wear from the temperature and constant high pressure they are subjected to. All hoses should be checked on a yearly basis for any visible signs of deterioration. Any hose showing the signs of deterioration listed above should be replaced immediately. All hoses should be replaced every five years.

NOTE: Longer inlet hoses are available (as optional equipment at extra cost) if the hoses supplied with the tumble dryer are not long enough for installation. Order hoses as follows:

Part No. 20617 Inlet hose 8.0 feet [2.4 m]

Part No. 20618 Inlet hose 10 feet [3.0 m]

Electrical Requirements

WARNING

Electrical power must be provided to tumble dryer at all times. The fire suppression system will be inoperative if the main electrical power supply is disconnected.

W690R1

No independent external power source or supply connection is necessary. Power to operate the fire suppression system is from the tumble dryer main power supply.

Auxiliary Alarm

The fire suppression system provides an auxiliary output contact when the system is activated. During tumble dryer installation, you have the option to connect a separate alarm system to this auxiliary output. Potential uses of the auxiliary output include, but are not limited to: (1) sounds an alarm, (2) activates a building sprinkler system, (3) notifies a fire department, etc. Use of the auxiliary output is not required for the fire suppression system to operate, but may be used for additional protection.

The connection to the auxiliary output is made through the H-4 header connection inside the fire suppression control box. Refer to *Figure 5* . The relay is rated for 5 Amp, 250VAC max.

NOTE: The auxiliary output is activated during fire suppression system maintenance test sequence. Consider this fact prior to your system test every month. (Example: If the external system uses the auxiliary output to call the fire department, inform the fire department before and after the fire suppression system maintenance test. If the external system uses the auxiliary output to activate a building sprinkler, disconnect auxiliary output prior to test.)

© Published by permission of the copyright owner - DO NOT COPY or TRANSMIT

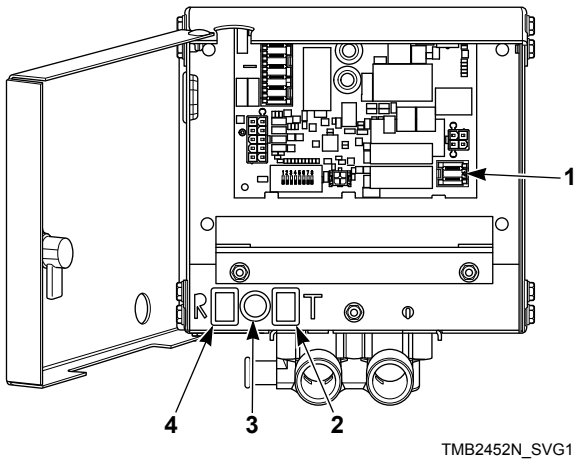

1. Auxiliary Alarm Fast-On Connection (there is a plastic shield over the control board that must be tipped down to access this connection)
2. Test Button
3. Light
4. Reset Button

Figure 5

Before Placing Tumble Dryer into Service

1. Ensure all panels and guards are in place.
2. Remove and discard wire tie from the airflow switch so it can swing freely.
3. Pull out emergency stop button, if applicable.
4. Turn on electrical supply to tumble dryer.
5. Open the supply valve for gas or steam heated tumble dryers.
6. After performing the previous checks, start the tumble dryer by pressing START. (Refer to the Operating section for detailed instructions.) Release the start button and open the loading door. The cylinder should stop rotating within seven seconds after the door is opened a maximum of 0.79 inches [20 mm] . If it does not, adjust the loading door switch. Refer to Adjustments section.
7. **Gas Tumble Dryers:** Start the tumble dryer and check the burner flame. Adjust the air inlet shutter as required. Refer to Adjustments section.

IMPORTANT: The electronic ignition system will attempt to light the gas by sparking for the "trial for ignition" period. If gas does not ignite within this period, the ignition control will go into a safety lockout and the valve will no longer open until the control is reset. On North America and OPL IEC models, the electronic ignition system is automatically reset. On Australia and vend IEC models the electronic ignition system must be manually reset. The control will pause the cycle and indicate that the ignition control needs to be reset. To reset the ignition control, press start key on the control . The control will then prompt for the start key to be pressed again to restart the cycle. On all models, ignition lockout may occur due to air in the gas line or the gas shut-off valve being in the OFF position. If the air is bled out of the gas line, the gas shut-off valve is in the ON position, the gas service is properly connected and the tumble dryer continues to have heater errors and/or prompts for the ignition control to be reset, remove the tumble dryer from service.

8. Load the cylinder with a full load of clean rags and run to remove oil or dirt from cylinder.
9. Check the airflow switch operation by opening the lint panel; be sure to remove shipping wire tie from airflow switch prior to operation. Temporarily override the lint panel safety circuit by taping a magnet to the switch located in upper right corner of lint compartment. The heating systems should shut off when the lint panel is opened a maximum of 6.0 inches [152 mm] .

The airflow switch operation may be affected by shipping wire tie still in place, lack of make-up air, or an obstruction in the exhaust duct. These should be checked. If there is a problem, contact an authorized service person.

WARNING

Do not operate tumble dryer if airflow switch is faulty. An explosive gas mixture could collect in tumble dryer if airflow switch does not operate properly.

W407R1

10. Clean cylinder by running a load of wet rags on one maximum heat cycle.

Models	Prepurge Time (seconds)	Interpurge Time (seconds)	Trial for Ignition (seconds)	Reset Lockout Condition By:
North America	1	23	10 (attempts to ignite 3 times)	Automatically resets.

Table continues...

© Published by permission of the copyright owner - DO NOT COPY or TRANSMIT

Models	Prepurge Time (seconds)	Interpurge Time (seconds)	Trial for Ignition (seconds)	Reset Lockout Condition By:
Australia and IEC	23	23	10	Press start key with access panel open.

If the tumble dryer does not meet ANY of the listed requirements, remove tumble dryer from use. Refer to *Removing Tumble Dryer from Service* section.

Required for IEC Models Only

Once machine is installed, please be sure to complete the following items:

- Review and verify machine operation with customer.
- Leave all literature and a signed Declaration of Conformity with customer.
- Review machine warranty information with customer.
- Apply cautionary stickers in language appropriate to country of sale. Market language label kits have been provided in the literature packet located in the cylinder. Position appropriate market language labels on the machine in the following regions prior to placing machine into service, if applicable:
  - On front panel at the periphery of cylinder access opening
  - On electrical box cover(s) (electric heat models have two electrical box covers)
  - On rear panel
  - On front panel near emergency stop button (fire suppression system equipped models only)
  - On fire suppression control box (fire suppression system equipped models only)

© Published by permission of the copyright owner - DO NOT COPY or TRANSMIT

Exhaust Requirements

Exhaust Requirements

CAUTION

Risk of fire. A clothes dryer produces combustible lint. Exhaust outdoors. Consult technical instructions for detailed exhaust specifications.

W933

WARNING

To reduce the risk of fire, DO NOT use plastic or thin foil ducting to exhaust the tumble dryer.

W773R1

WARNING

To reduce the risk of fire and accumulation of combustible gases, DO NOT exhaust tumble dryer air into a window well, gas vent, chimney or enclosed, unventilated area such as an attic wall, ceiling, crawl space under a building, or concealed space of a building.

W059R1

Layout

Whenever possible, install tumble dryers along an outside wall where duct length can be kept to a minimum, and make-up air can be easily accessed. Construction must not block the airflow at the rear of the tumble dryer. Doing so would prevent adequate air supply to the tumble dryer combustion chamber.

Make-Up Air

A tumble dryer is forced air exhausted and requires provisions for make-up air to replace air exhausted by tumble dryer.

IMPORTANT: Do not obstruct flow of combustion and ventilation air.

Required Make-Up Air Opening (to the outside) for Each Tumble Dryer, in. ^{2} [cm ^{2}]

Model	Opening
120 Series	360 [2300]
170 Series	525 [3400]
200 Series	525 [3400]

Make-up air openings with louvers will restrict airflow. The opening must be increased to compensate for area taken up and restrictions created by louvers. Contact the louver manufacturer for the exact specifications.

Make-up air openings in rooms containing tumble dryer(s) and/or gas fired hot water heater or other gravity vented appliances must be increased sufficiently to prevent downdrafts in any of the vents when all tumble dryers are in operation. Do not locate gravity vented appliances between tumble dryer(s) and make-up air openings. If it is necessary to duct make-up air to tumble dryer(s), increase area of duct work by 25% to compensate for restrictions in air movement.

Venting

WARNING

To reduce the risk of fire due to increased static pressure, we do not recommend installation of in-line secondary lint filters or lint collectors. If secondary systems are mandated, frequently clean the system to assure safe operation.

W749

IMPORTANT: Installing in-line filters or lint collectors will cause increased static pressure. Failure to maintain the secondary lint system will decrease tumble dryer efficiency and may void machine warranty.

For maximum efficiency and minimum lint accumulation, tumble dryer air must be exhausted to the outdoors by the shortest possible route.

© Published by permission of the copyright owner - DO NOT COPY or TRANSMIT

Proper sized exhaust ducts are essential for proper operation. All elbows should be sweep type. Exhaust ducts must be assembled so the interior surfaces are smooth, so the joints do not permit the accumulation of lint. DO NOT use plastic, thin foil or Type B flexible ducts - rigid metal ducts are recommended. Use exhaust ducts made of sheet metal or other noncombustible material. DO NOT use sheet metal screws or fasteners on exhaust pipe joints which extend into the duct and catch lint. Use of duct tape or pop-rivets on all seams and joints is recommended, if allowed by local codes.

Verify that old ducts are thoroughly cleaned out before installing new tumble dryer(s).

WARNING

Improperly sized or assembled ductwork causes excess back pressure which results in slow drying, lint collecting in the duct, lint blowing back into the room, and increased fire hazard.

W355

NOTE: Exhaust ducts must be constructed of sheet metal or other noncombustible material. Such ducts must be equivalent in strength and corrosion resistance to ducts made of galvanized sheet steel not less than 0.02 inches [0.50 mm] thick.

Where the exhaust duct pierces a combustible wall or ceiling, the opening must be sized per local codes. The space around the duct may be sealed with noncombustible material. Refer to *Figure 7* .

IMPORTANT: For best performance provide an individual exhaust duct for each tumble dryer. Do not install a gas water heater in a room containing tumble dryers. It is better to have the water heater in a separate room with a separate air inlet.

NOTE: Proper venting will ensure that any condensate is subsequently re-evaporated and discharged.

NOTE: On IEC approved tumble dryers where it may be required, an exhaust adapter is available to convert to female outlet. Contact local distributor or manufacturer.

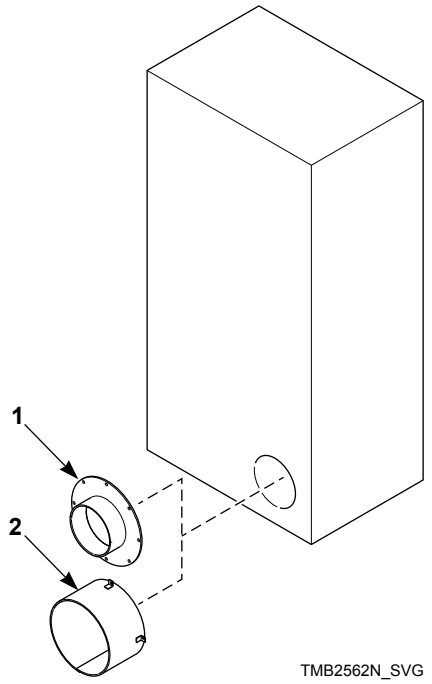

1. Not Applicable
2. 120, 170, 200 Models

Figure 6

© Published by permission of the copyright owner - DO NOT COPY or TRANSMIT

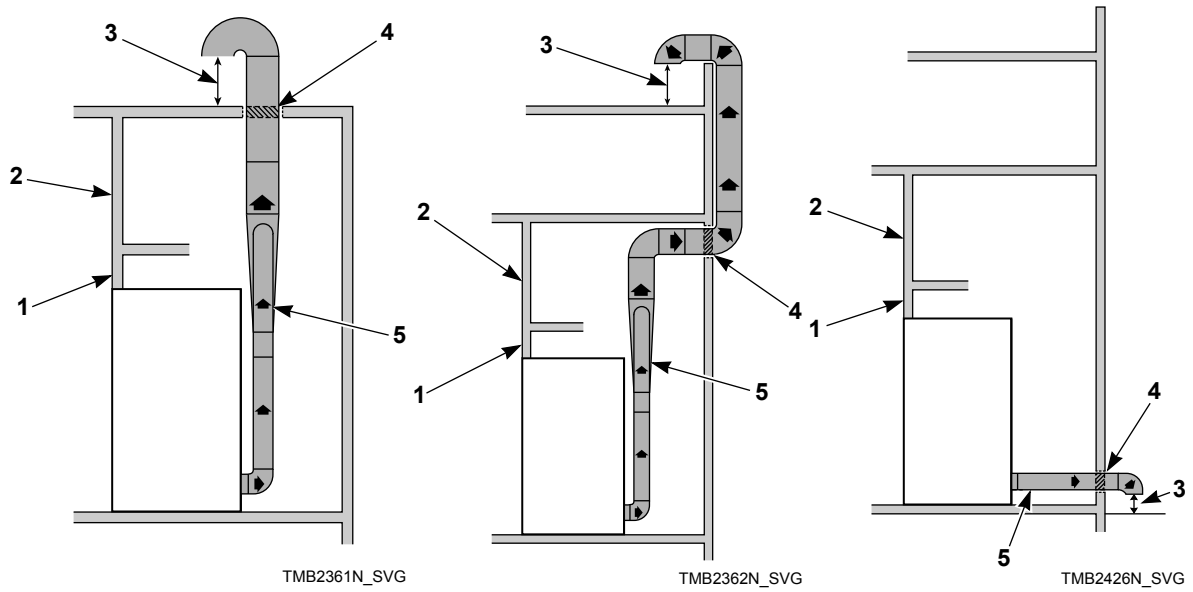

1. Removable strip of panel in framing wall to permit removal of tumble dryer from framing wall
2. Partition or bulkhead
3. Minimum distance between exhaust opening and roof, ground or other obstruction, 36 in. [910 mm]
4. 2.0 in. [50 mm] minimum clearance on both sides of duct
5. Exhaust airflow – maximum length of rigid duct 14 ft. [4.3 m] or 7.9 ft. [2.4 m] of flexible metal duct

Figure 7

NOTE: Do not install wire mesh or screen in exhaust duct opening to avoid lint build-up or impacting proper discharge of air from tumble dryers.

NOTE: Where exhaust duct pierces a combustible wall or ceiling, the opening must be sized per local codes.

NOTE: Inside of duct must be smooth. Do not use sheet metal screws to join sections.

NOTE: Locate exhaust far enough away from make-up air location to prevent re-introduction.

Consult your local building code for regulations which may also apply.

Individual Venting

For maximum efficiency and performance, it is preferred to exhaust tumble dryer(s) individually to the outdoors.

IMPORTANT: At no point may the cross sectional area of installed venting be less than the cross sectional area of the exhaust outlet of the tumble dryer.

The exhaust duct must be designed so the static back pressure measured 12 inches [305 mm] from the exhaust outlet does not exceed the maximum allowable pressure specified in the Specifications and Dimensions Table or on the installation sticker on the rear of the tumble dryer.

NOTE: Static back pressure must be measured with the tumble dryer running.

The maximum allowable length venting is 14 feet [4.3 m] and two 90° elbows or equivalent. If the equivalent length of a duct required for an installation exceeds the maximum allowable equivalent length, the diameter of a round duct must be increased by 10% for each additional 20 feet [6.1 m] . Cross section area of a rectangular duct must be increased by 20% for each additional 20 feet [6.1 m] . Refer to *Table 1* to determine equivalent venting.

Duct Diameter	Equivalent Length of Rigid Straight Duct
10 in. [254 mm]	One 90° elbow = 11.6 ft. [3.5 m]
12 in. [305 mm]	One 90° elbow = 14 ft. [4.3 m]
14 in. [356 mm]	One 90° elbow = 16 ft. [4.9 m]
16 in. [406 mm]	One 90° elbow = 18.7 ft. [5.7 m]

Table 1 *continues...*

© Published by permission of the copyright owner - DO NOT COPY or TRANSMIT

Duct Diameter	Equivalent Length of Rigid Straight Duct
18 in. [457 mm]	One 90° elbow = 21 ft. [6.4 m]
Equivalent Length (meter) = 1.17 x Duct Diameter (mm)	

Table 1

Example: A 12 inch [305 mm] diameter duct's equivalent length of 14 feet [4.3 m] of duct and two 90° elbows is:

Equivalent Length

= 14 ft. [4.3 m] + (2) 90° elbows

= 14 ft. [4.3 m] + 14 ft. [4.3 m] + 14 ft. [4.3 m]

= 42 ft. [12.8 m]

With the tumble dryer in operation, airflow at any point in the duct should be at least 1200 feet/min. [366 m/min.] to ensure that lint remains airborne. If 1200 feet/min. [366 m/min.] cannot be maintained, schedule monthly inspections and cleaning of the ductwork.

NOTE: The maximum length of a flexible metal duct must not exceed 7.9 ft. [2.4 m] as required to meet UL2158, clause 7.3.2A.

Manifold Venting

IMPORTANT: Do not exhaust tumble dryers into a flue used by other appliances.

While it is preferable to exhaust tumble dryers individually to the outdoors, a main collector duct may be used if it is sized according to *Figure 9* and *Figure 10* . This illustration indicates minimum diameters, and should be increased if the collector length exceeds 14 feet [4.3 m] and two 90° elbows. The diameter of a round duct must be increased by 10% for each additional 20 feet [6.1 m] . Cross sectional area of a rectangular or square duct must be increased 20% for each additional 20 feet [6.1 m] . Refer to *Table 2* to determine equivalent ducting sizing. The collector duct may be rectangular or square in cross section, as long as the area is not reduced. Provisions MUST be made for lint removal and cleaning of the collector duct.

The vent collector system must be designed so the static back pressure measured 12 inches [305 mm] from the exhaust outlet does not exceed the maximum allowable pressure specified in the Specifications and Dimensions Table or on the installation sticker on the rear of tumble dryer. Static back pressure must be measured with all tumble dryers vented into the collector operating.

NOTE: Never connect a tumble dryer duct at a 90° angle to the collector duct. Refer to *Figure 8* . Doing so will cause excessive back pressure, resulting in poor performance. Never connect two tumble dryer exhaust ducts directly across from each other at the point of entry to the collector duct.

With the tumble dryer in operation, airflow at any point in the duct should be at least 1200 feet/min. [366 m/min.] to ensure that lint remains airborne. If 1200 feet/min. [366 m/min.] cannot be maintained, schedule monthly inspections and cleaning of the ductwork.

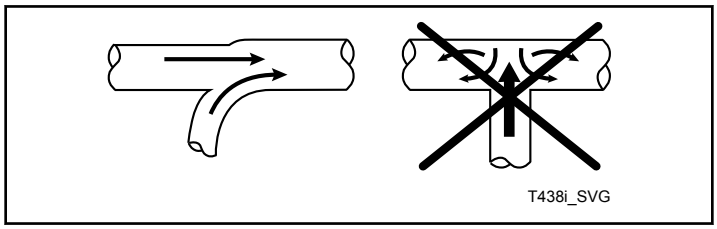

Figure 8

© Published by permission of the copyright owner - DO NOT COPY or TRANSMIT

One Manifold Assembly

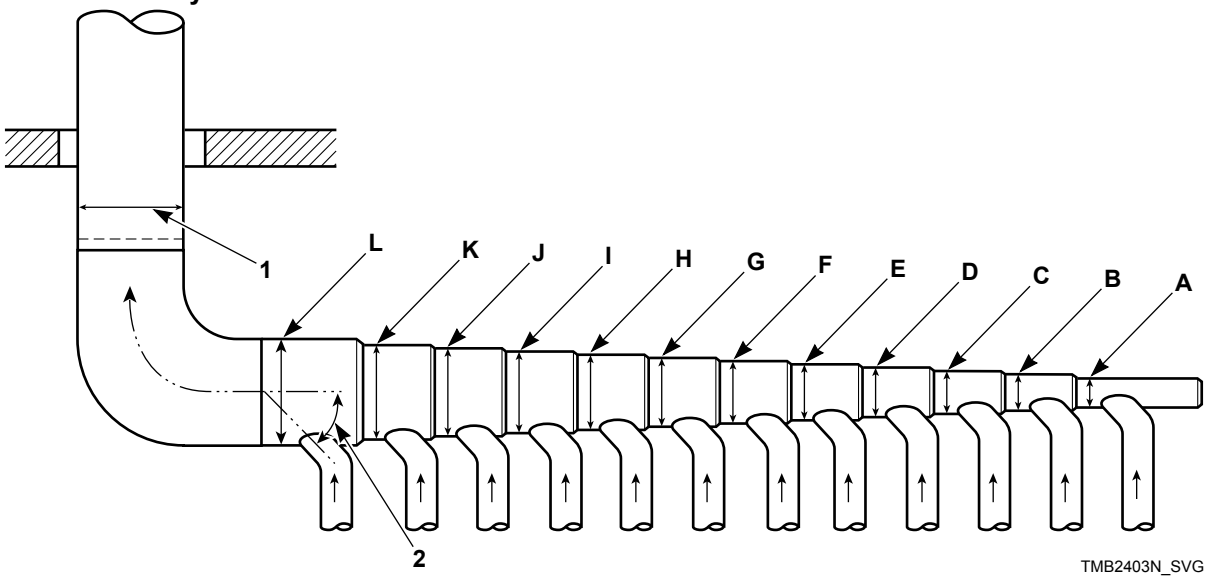

1. Outlet duct diameter = largest duct diameter based on number of tumble dryers
2. 45° typical

Figure 9

Duct Station	120 Series	170/200 Series
A	10 in. [254 mm]	12 in. [305 mm]
B	15 in. [381 mm]	17 in. [432 mm]
C	18 in. [457 mm]	21 in. [533 mm]
D	21 in. [533 mm]	24 in. [610 mm]
E	24 in. [610 mm]	27 in. [686 mm]
F	26 in. [660 mm]	30 in. [762 mm]
G	28 in. [711 mm]	32 in. [813 mm]
H	30 in. [762 mm]	34 in. [864 mm]
I	32 in. [813 mm]	36 in. [914 mm]
J	33 in. [838 mm]	38 in. [965 mm]
K	35 in. [889 mm]	40 in. [1,016 mm]
L	36 in. [914 mm]	42 in. [1,067 mm]

Table 2

NOTE: *Table 2* represents tumble dryers with the same vent size. If multiple vent sizes are used, consult a local HVAC specialist.

NOTE: Duct clean-out recommended every 6 feet [0.18 m] .

© Published by permission of the copyright owner - DO NOT COPY or TRANSMIT

Two Manifold Assemblies

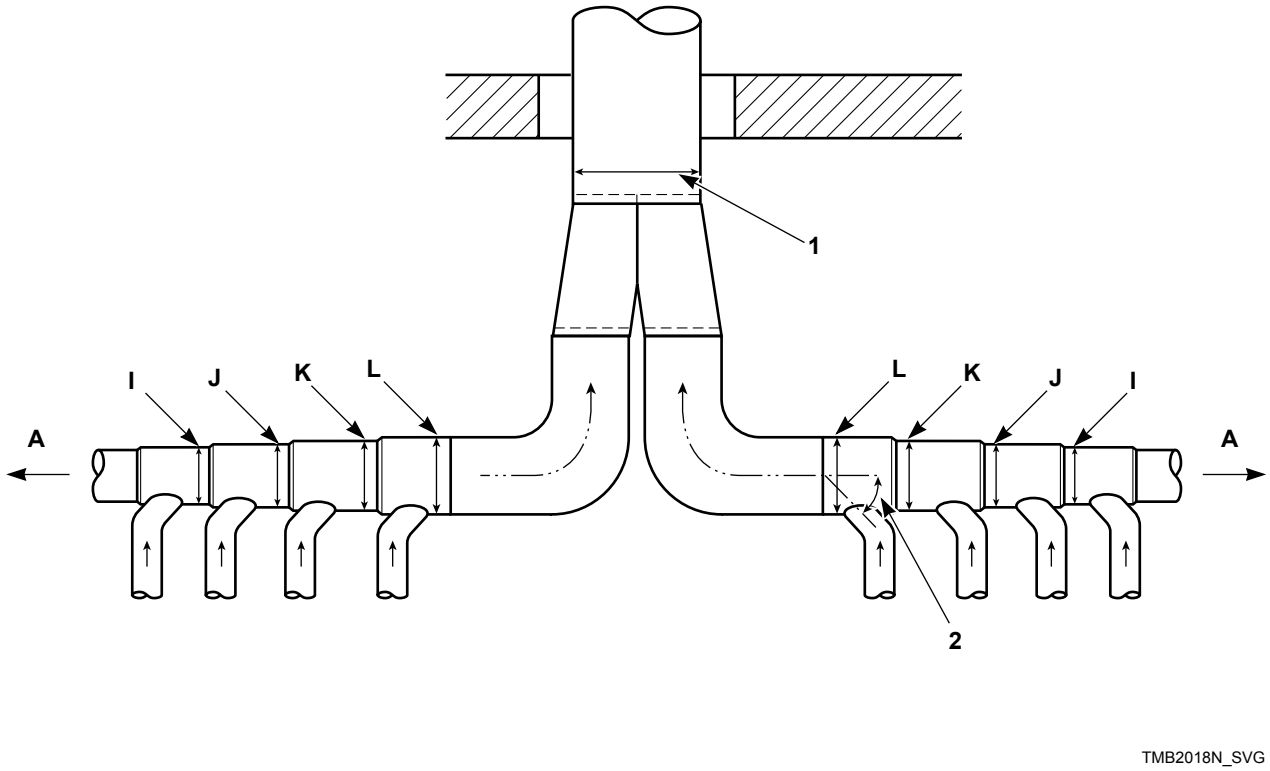

1. Outlet duct diameter = combined largest duct diameter of both sides
2. 45° typical

Figure 10

Refer to *Table 2* for measurements for each manifold.

© Published by permission of the copyright owner - DO NOT COPY or TRANSMIT

Gas Requirements

Gas Requirements

CAUTION

- **Thoroughly test all piping for leaks before operating. All fittings and piping must be tight and supported against breakage and vibration.**
- **Turn off primary gas line shut off cock when not in use (overnight, weekends, holidays, etc.).**

W934

WARNING

To reduce the risk of fire or explosion, DO NOT CONNECT THE GAS LINE TO THE TUMBLE DRYER IF THE GAS SERVICE IS NOT THE SAME AS THAT SPECIFIED ON THE TUMBLE DRYER SERIAL PLATE! It will first be necessary to convert the gas burner orifice and gas valve. Appropriate conversion kits are available.

W060R1

WARNING

To reduce the risk of gas leaks, fire or explosion, use a new flexible stainless steel connector.

W774

IMPORTANT: Any product revisions or conversions must be made by the Manufacturer's Authorized Dealers, Distributors or local service personnel.

IMPORTANT: The tumble dryer must be isolated from the gas supply piping system by closing its individual manual shut-off valve during any pressure testing of the gas supply piping system. Gas supply pressure must never exceed 1/2 PSI [3.45 kPa, 34.5 mbar] during leak testing. Gas supply must provide 6.5+/-1.5 inches [1.62+/-0.37 kPa, 16.17+/-3.73 mbar] with all gas appliances firing.

NOTE: For gas valves with a manual shut-off switch on the gas valve, the shut-off switch does not protect the valve from this pressure test. Use the individual manual shut-off valve from the gas supply piping system to protect the gas valve.

IMPORTANT: The installation must comply with local codes or, in the absence of local codes:

- **with the latest edition of the "National Fuel Gas Code," ANSI Z223.1/NFPA 54 in the U.S.A.**
- **with CAN/CSA-B149.1 Natural Gas and Propane Installation Code in Canada**
- **In Australia and New Zealand , installation must comply with the Gas Installations Standard AS/NZS 5601 Part 1: General Installations.**
- **In the EU, installation must comply with the installation regulations of the country of destination.**

IMPORTANT: For Australian models, do not remove the gas type label on the rear of the unit.

Obtain specific gas service pipe size from the gas supplier. Refer to *Table 4* and *Table 5* for general pipe size.

The following must be furnished and installed by the customer for the gas service line to each tumble dryer. Refer to *Figure 11* .

- Sediment traps
- Shut-off valves (supplied in literature bag)
- Supply pressure taps (1/8 NPT minimum) (refer to *Figure 11*)
- Union at gas supply connection (listed to ANSI Z21.24 and CSA 6.10)

It is important that equal pressure be maintained at all tumble dryer gas connections. This can be done by installing a 1 inch pipe gas loop to maintain equal pressure at all gas connections. Refer to *Figure 15* .

WARNING

To reduce the risk of fire or explosion, if the tumble dryer is to be connected to Liquefied Petroleum (L.P.) gas, a vent to the outdoors must be provided in the room where the tumble dryer is installed.

W062R1

Before installation, check that the local distribution conditions, nature of gas and pressure, and the adjustment of the appliance are compatible.

NATURAL GAS supply pressures with all gas appliances running (tumble dryers, water heaters, space heaters, furnace, etc.):

© Published by permission of the copyright owner - DO NOT COPY or TRANSMIT

	North America Models	Australia Models	CE Models
Maximum	10.5 in. w.c.	2.61 kPa	Refer to *Table 3*
Recommend-ed	6.5 in. w.c	1.62 kPa	
Minimum	5 in. w.c.	1.13 kPa	

An in-line pressure regulator may be required if the line pressure exceeds 10.5 water column inches [26.1 mbar, 2.61 kPa] with all gas appliances running.

PROPANE/LIQUID PETROLEUM GAS (L.P.G.) supply pressures with all gas appliances running (tumble dryers, water heaters, space heaters, furnace, etc.):

	North America Models	Australia Models	CE Models
Maximum	13 in. w.c.	3.23 kPa	Refer to *Table 3*
Recommend-ed	11 in. w.c.	2.74 kPa	
Minimum	10 in. w.c.	2.49 kPa	

© Published by permission of the copyright owner - DO NOT COPY or TRANSMIT

Gas Category	Country	Gas	Category	Supply Pressure (mbar)			Manifold Pressure (mbar)
				nominal	minimum	maximum	
$II_{2H3B/P}$	BG, CY, CZ, DK, EE, FI, HR, LT, NO, SE, SI SK	G20	2H	20	17	25	8.0
		G30/31	3B/P (30)	30 (28-30)	25	35	*
$II_{2H3B/P}$	HU	G20	2H	25	18	33	8.0
		G30/31	3B/P	50	42.5	57.5	27.5
$II_{2H3B/P}$	AT, CH	G20	2H	20	17	25	8.0
		G30/31	3B/P	50	42.5	57.5	27.5
II_{2H3+}	CH, ES, GB, GR, IE, IT, TR	G20	2H	20	17	25	8.0
		G30	3+ (28-30/37) Butane	30 (28-30)	25	35	*
		G31	3+ (28-30/37) Propane	37	25	45	*
$II_{2E3B/P}$	PL	G20	2E	20	17	25	8.0
		G30	3B/P	30 (28-30)	25	35	*
$II_{2E3B/P}$	LU	G20	2E	20	17	25	8.0
		G30/31	3B/P	50	42.5	57.5	27.5
$II_{2E3B/P}$ $II_{2E(LL)3B/P}$	DE	G20	2E(LL)/2E	20	17	25	8.0
		G25	2E(LL)	20	17	25	12.0
		G30/31	3B/P	50	42.5	57.5	27.5
$II_{2E(r)3+}$	FR	G20	2E(r)	20	17	25	8.0
		G25	2E(r)	20	17	25	12.0
		G30	3+ (30/37) Butane	30 (28-30)	25	35	*
		G31	3+ (30/37) Propane	37	25	45	*
$II_{2L3B/P}$	NL	G25	2L	25	20	30	12.0
		G30	3B/P	30 (28-30)	25	35	*

Table 3 *continues...*

© Published by permission of the copyright owner - DO NOT COPY or TRANSMIT

Gas Category	Country	Gas	Category	Supply Pressure (mbar)			Manifold Pressure (mbar)
				nominal	minimum	maximum	
$II_{2L3B/P}$	RO	G25	2L	20	17	25	12.0
		G30	3B/P	30 (28-30)	25	35	*
$I_{3B/P}$	IS, MT	G30	3B/P	30 (28-30)	25	35	*
$I_{2E(R)}$	BE	G20	2E(R) 20/25	20	17	25	8.0
		G25	2E(R) 20/25	20	17	25	12.0
I_{3+}	BE	G30	3+ (28-30/37) Butane	30 (28-30)	25	35	*
		G31	3+ (28-30/37) Propane	37	25	45	*
* Appliance regulator out of action							

Table 3

Check manifold pressure. It is important that gas be supplied to the tumble dryer in accordance with the requirements on the serial plate. Refer to table below and *Figure 1*. If the manifold pressure required adjustment, refer to *How to Adjust Gas Valve Governor/Regulator*.

	North America Models	Australia Models	CE Models
Natural Gas	3.5 in. w.c.	0.87 kPa	Refer to *Table 3*
Propane/ L.P.G.	10.5 in. w.c.	2.36 kPa	

The connection of gas supply to the appliance shall be made with a flexible hose suitable for the appliance category in accordance with national installation regulations of the country of destination. If in doubt, the installer shall contact the supplier.

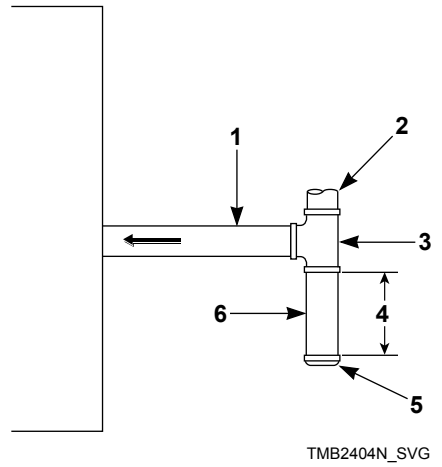

1. Gas Line to Tumble Dryer
2. Gas Supply Piping System
3. Gas "T" Fitting
4. 3 in. [76 mm] Minimum Gas Pipe
5. Gas Pipe Cap
6. Sediment Trap

Figure 11

© Published by permission of the copyright owner - DO NOT COPY or TRANSMIT

How to Change Burner Orifice Size

1. Disconnect electrical power from tumble dryer. Close gas shut-off valve to tumble dryer. Refer to *Figure 12* .

WARNING

When converting the tumble dryer to a different gas or pressure, first verify that the supply inlet pressure is equipped with a pressure regulator (located ahead of the tumble dryer) that will maintain the gas supply at the inlet pressure specified.

W430R1

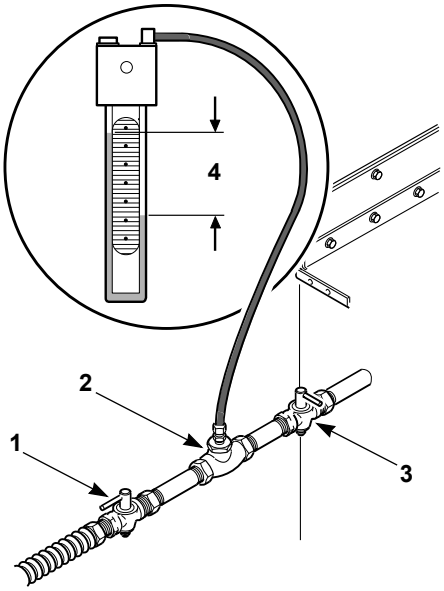

1. Gas Shut-Off Valve (Ahead of pressure tap) (Shown in open position) (Not Supplied)
2. Pressure Tap
3. Gas Shut-Off Valve (Shown in closed position) (Not Supplied)
4. Specified Local Inlet Pressure

Figure 12

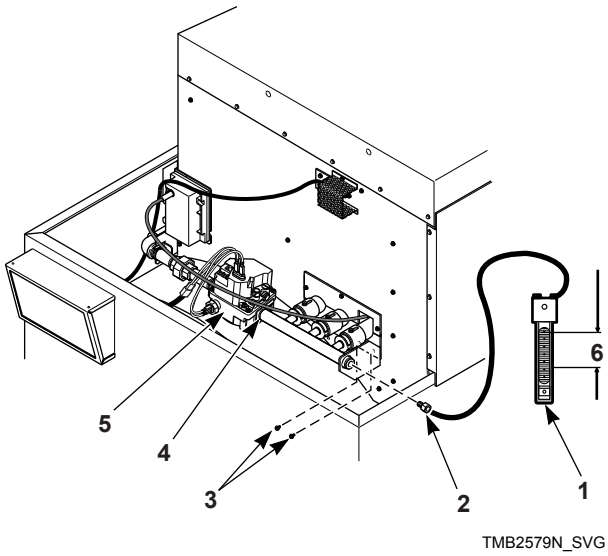

NOTE: For IEC gas valves, attach manometer to end of orifice holder. For Australia and North America gas valves, attach manometer to the outlet pressure port on the gas valve.

1. Manometer
2. Pressure Tap
3. Burner Tube Attaching Screws
4. Gas Valve Flange
5. Gas Valve
6. Specified Pressure

Figure 13

2. Remove gas valve:
   a. Remove the burner orifice(s) from the spud holder.
   b. When converting from Natural Gas to L.P. Gas, the leftmost burner and orifice (viewed from front) must be removed.
   c. In place of the removed orifice, a blank orifice (Part No. M400995) and a Burner Opening Cover (Part No. M413099) must be installed.
3. Install the new, correct burner orifice(s). Refer to *Figure 14* . Torque each to 9 – 10 Nm.
4. Reinstall spud holder assembly to gas valve, making certain burner orifice(s) are in line with burner tube opening. Refer to *Figure 14* .
5. Commission tumble dryer for use.

   NOTE: Blank burner orifices are Part No. M400995.

How to Adjust Gas Valve Governor/Regulator

1. Check gas burner orifice (manifold) pressure as follows. Refer to *Figure 13* .
2. Remove screw plug from pressure tap.

© Published by permission of the copyright owner - DO NOT COPY or TRANSMIT

3. Connect a “U”-tube manometer (or similar pressure gauge) to the burner orifice (manifold) pressure tap.
4. Start tumble dryer and note pressure once flame is burning. Remove regulator cap and adjust regulator screw until the burner orifice pressure per applicable table is achieved. Replace regulator cap. Refer to *Figure 13* .
5. Commission tumble dryer for use.

Burner Orifice

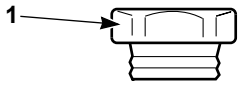

TMB2015N_SVG

1. Size Stamped on Orifice

Figure 14

Installing CE Gas Tumble Dryer

This information is to be used when installing gas tumble dryers in countries and/or on gases different than the machine’s factory configuration. Tumble Dryers are supplied from the factory for operation with natural gas categories 2H, 2E, 2L, 2E(LL), 2E(r), 2E(R) or unregulated L.P.G. categories 3 B/P, 3+. To install tumble dryers for regulated LPG category 3B/P requires a conversion kit.

Tumble dryers are built in two different configurations:

- Natural Gas – regulated/governor
- Liquefied Petroleum Gas (L.P.G.) – not regulated/no governor

For converting models from Natural Gas to L.P.G., order the appropriate kit listed in *Gas Requirements* section.

Serial plates supplied from the factory are configured for:

- Natural Gas, standard rate
  - AT/BG/CH/CY/CZ/DK/EE/FI/HR/LT/NO/SE/SI/SK: $II_{2H3B/P}$
  - CH/ES/GB/GR/IE/IT/TR: II_{2H3+}
  - DE/LU/PL: $II_{2E3B/P}$
- Natural Gas, Eco rate
  - AT/BG/CH/CY/CZ/DK/EE/ES/FI/GB/GR/HR/IE/IT/LT/NO/SE/SI/SK/TR: I_{2H}
  - DE/LU/PL: I_{2E}
- L.P.G.
  - BE/CH/ES/FR/GB/GR/IE/IT/TR: I_{3+}

These instructions pertain to the situations when the country of use or gas supply is different than that on the serial plate. When installing in a different country, peel off the appropriate country sticker (included in literature packet with tumble dryer) and apply it to the serial plate over the existing country information. Adjust manifold pressure as applicable, per *Table 1*.

Units installed in France (FR) require a gas connection adapter having ISO228 (BSPP, G) parallel threads and a sealing washer. The adapter must have a sufficient flat area to seat the sealing washer.

Adjusting Manifold Pressure for Natural Gas G20 or G25

1. If country/gas category designation required is not listed on the serial plate, affix the appropriate country/gas category label supplied over the main serial plate designations.
2. Verify gas supply pressure and adjust as necessary. Refer to *Figure 12* .
3. Verify manifold pressure. Refer to *How to Adjust Gas Valve Governor/Regulator* and adjust as necessary.

Adjusting Supply Pressure for L.P.G. G30 or G31

1. If country/gas category designation required is not listed on the serial plate, affix the appropriate country/gas category label over the main serial plate designations.
2. Verify gas supply pressure and adjust as necessary. Refer to *Figure 12* .

Converting From Natural Gas to L.P.G. or From Unregulated L.P.G. to Regulated L.P.G.

1. Refer to table below to determine conversion kit part number required.
2. Follow instructions supplied in conversion kit.

Model	North America Models	Australia Models	CE Models
120	44328804	44328813	44330303
170	44328805	44328807	44330304
200	44328806	44328808	44330305

CE GASES refer to *Installing CE Gas Tumble Dryer* section.

Start-Up Procedure

Turn on gas and check all pipe connections (internal and external) for gas leaks with a non-corrosive leak detection fluid. Purge air in gas service line by operating the tumble dryers in the drying mode. If burner does not light and unit goes into lockout, press start key on the control while the access panel is open. The control will then prompt for the start key to be pressed again to restart the cycle. Repeat these steps until burner ignites. Use pipe compound, resistant to actions of L.P. gas, on all pipe threads.

© Published by permission of the copyright owner - DO NOT COPY or TRANSMIT

WARNING

Check all pipe connections, internal and external, for gas leaks using a non-corrosive leak detection fluid. To reduce the risk of explosion or fire, DO NOT USE AN OPEN FLAME TO CHECK FOR GAS LEAKS! Gas connections should be checked daily for leakage.

W924

Gas Supply Pipe Sizing and Looping

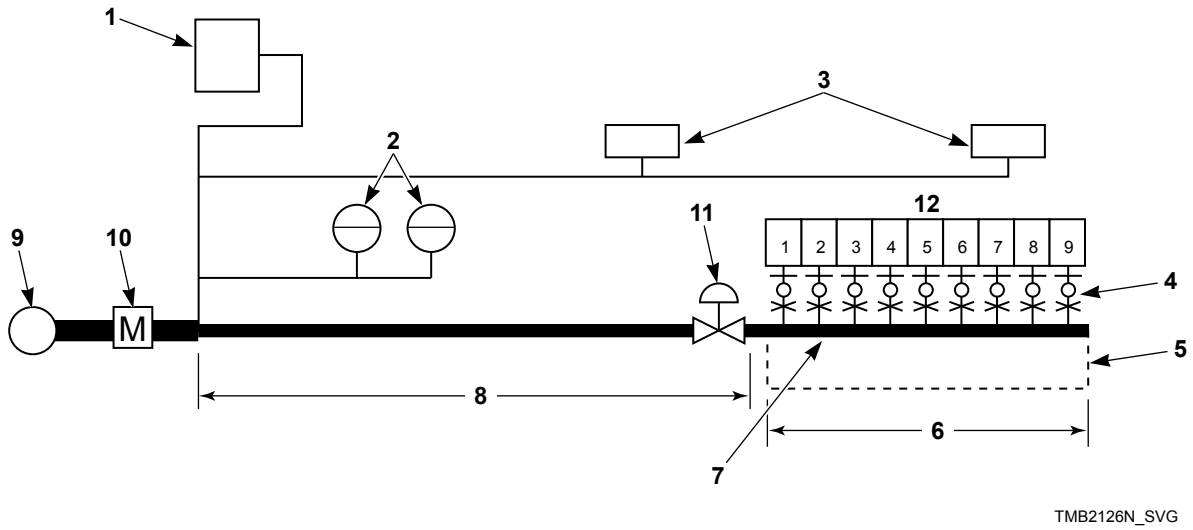

1. Gas furnace [120,000 Btu/hr. [127 Mj/hr., 35 kW]]
2. Gas water heaters [400,000 Btu/hr. [422 Mj/hr., 117 kW] each]
3. Gas space heaters [70,000 Btu/hr. [79 Mj/hr., 21 kW] each]
4. Sediment traps, supply pressure taps and shut-off valves. Refer to *Figure 1*.
5. 1 in. [25 mm] gas pipe loop
6. 19 ft. [5.8 m]
7. Minimum Pipe Size is 3/4 NPT for 120 Series Gas, 1 NPT for 170 and 200 Series Gas
8. 25 ft. [7.6 m]
9. Main regulator
10. Gas meter
11. Pressure regulator (if required)
12. 120 series tumble dryers = 270,000 Btu/hr. [285 Mj/hr.,79 kW] each; 170 series tumble dryers = 395,000 Btu/hr. [417 Mj/hr., 116 kW] each; 200 series tumble dryers = 425,000 Btu/hr. [448 Mj/hr., 125 kW] each

Figure 15

SAMPLE CALCULATIONS:

Equivalent length = Total length of main gas supply pipe to the far end of the tumble dryers.
= 25 ft. + 19 ft. [7.6 m + 5.8 m] gas supply pipe
= 44 ft. [13.4 m] Total Gas Line

Total Btu/hr. = The sum of the Btu/hr. of all 120 series tumble dryers being fed by the main gas supply pipe.
= 9 x 270,000 [285, 79]
= 2,430,000 Btu/hr. [2,564 Mj/hr., 712 kW]

Using *Table 4* , the main supply pipe diameter should be 3 NPT.

IMPORTANT: Gas loop piping must be installed as illustrated to equalize gas pressure for all tumble dryers connected to single gas service. Other gas using appliances should be connected upstream from loop.

© Published by permission of the copyright owner - DO NOT COPY or TRANSMIT

Low Pressure Gas Pipe Sizes

NOTE: Sizing calculations based on National Fuel Gas Code.

Gas Pipe Size Required for 1000 BTU Natural Gas (Standard Conditions) at Upstream Pressure— 7.0 ± 1.5 inches water column pressure [17.4 ± 4.0 mbar, 1.74 ± 0.37 kPa]						
Gas Appliances Total BTU/hr.	Equivalent Length					
	25 feet [7.6 m]	50 feet [15.2 m]	75 feet [22.9 m]	100 feet [30 m]	125 feet [38 m]	150 feet [46 m]
	Based on 0.3 inches Water Column Pressure Drop for Length Given Sizes shown in Gas Pipe Nominal Size (NPT)					
100,000	3/4	3/4	3/4	1	1	1
120,000	3/4	3/4	1	1	1	1
140,000	3/4	1	1	1	1	1
160,000	3/4	1	1	1	1-1/4	1-1/4
180,000	3/4	1	1	1-1/4	1-1/4	1-1/4
200,000	1	1	1	1-1/4	1-1/4	1-1/4
300,000	1	1-1/4	1-1/4	1-1/4	1-1/2	1-1/2
400,000	1-1/4	1-1/4	1-1/2	1-1/2	1-1/2	1-1/2
500,000	1-1/4	1-1/2	1-1/2	1-1/2	1-1/2	2
600,000	1-1/4	1-1/2	1-1/2	2	2	2
700,000	1-1/2	1-1/2	2	2	2	2
800,000	1-1/2	1-1/2	2	2	2	2
900,000	1-1/2	2	2	2	2	2-1/2
1,000,000	1-1/2	2	2	2	2-1/2	2-1/2
1,100,000	1-1/2	2	2	2	2-1/2	2-1/2
1,200,000	1-1/2	2	2	2-1/2	2-1/2	2-1/2
1,300,000	2	2	2-1/2	2-1/2	2-1/2	2-1/2
1,400,000	2	2	2-1/2	2-1/2	2-1/2	2-1/2
1,500,000	2	2	2-1/2	2-1/2	2-1/2	2-1/2
1,600,000	2	2	2-1/2	2-1/2	2-1/2	3

Table 4 *continues...*

© Published by permission of the copyright owner - DO NOT COPY or TRANSMIT

Gas Pipe Size Required for 1000 BTU Natural Gas (Standard Conditions) at Upstream Pressure— 7.0 ± 1.5 inches water column pressure [17.4 ± 4.0 mbar, 1.74 ± 0.37 kPa]						
Gas Appli-ances Total BTU/hr.	Equivalent Length					
	25 feet [7.6 m]	50 feet [15.2 m]	75 feet [22.9 m]	100 feet [30 m]	125 feet [38 m]	150 feet [46 m]
	Based on 0.3 inches Water Column Pressure Drop for Length Given Sizes shown in Gas Pipe Nominal Size (NPT)					
1,700,000	2	2-1/2	2-1/2	2-1/2	3	3
1,800,000	2	2-1/2	2-1/2	2-1/2	3	3
1,900,000	2	2-1/2	2-1/2	3	3	3
2,000,000	2	2-1/2	2-1/2	3	3	3
2,200,000	2	2-1/2	3	3	3	3
2,400,000	2-1/2	2-1/2	3	3	3	3-1/2
2,600,000	2-1/2	2-1/2	3	3	3-1/2	3-1/2
2,800,000	2-1/2	3	3	3	3-1/2	3-1/2
3,000,000	2-1/2	3	3	3-1/2	3-1/2	3-1/2
For L.P. Gas, correct the total Btu/hr by multiplying it by 0.6. The answer is the equivalent Btu on the above chart.						

Table 4

© Published by permission of the copyright owner - DO NOT COPY or TRANSMIT

High Pressure Gas Pipe Sizes

NOTE: Sizing calculations based on National Fuel Gas Code.

IMPORTANT: A high pressure regulator is required at each machine.

Gas Pipe Size Required for 1000 BTU Natural Gas (Standard Conditions) at Upstream Pressure — 2.0 ± 0.4 PSI [138 ± 28 mbar, 13.7 ± 2.7 kPa]						
	Equivalent Length					
	25 feet [7.6 m]	50 feet [15.2 m]	75 feet [22.9 m]	100 feet [30 m]	125 feet [38 m]	150 feet [46 m]
Gas Appliances Total BTU/hr.	Based on 1 PSI Pressure Drop for Length Given Sizes shown in Gas Pipe Nominal Size (NPT)					
100,000	1/2	1/2	1/2	1/2	1/2	1/2
120,000	1/2	1/2	1/2	1/2	1/2	1/2
140,000	1/2	1/2	1/2	1/2	1/2	1/2
160,000	1/2	1/2	1/2	1/2	1/2	1/2
180,000	1/2	1/2	1/2	1/2	1/2	1/2
200,000	1/2	1/2	1/2	1/2	1/2	1/2
300,000	1/2	1/2	1/2	1/2	1/2	3/4
400,000	1/2	1/2	1/2	1/2	1/2	3/4
500,000	1/2	1/2	1/2	3/4	3/4	3/4
600,000	1/2	1/2	3/4	3/4	3/4	3/4
700,000	1/2	3/4	3/4	3/4	3/4	1
800,000	1/2	3/4	3/4	3/4	3/4	1
900,000	1/2	3/4	3/4	3/4	3/4	1
1,000,000	3/4	3/4	3/4	3/4	1	1
1,100,000	3/4	3/4	3/4	3/4	1	1
1,200,000	3/4	3/4	3/4	1	1	1
1,300,000	3/4	3/4	3/4	1	1	1-1/4
1,400,000	3/4	3/4	1	1	1	1-1/2
1,500,000	3/4	3/4	1	1	1	1-1/4
1,600,000	3/4	3/4	1	1	1	1-1/4

Table 5 *continues...*

© Published by permission of the copyright owner - DO NOT COPY or TRANSMIT

Gas Pipe Size Required for 1000 BTU Natural Gas (Standard Conditions) at Upstream Pressure — 2.0 ± 0.4 PSI [138 ± 28 mbar, 13.7 ± 2.7 kPa]						
Gas Appli-ances Total BTU/hr.	Equivalent Length					
	25 feet [7.6 m]	50 feet [15.2 m]	75 feet [22.9 m]	100 feet [30 m]	125 feet [38 m]	150 feet [46 m]
	Based on 1 PSI Pressure Drop for Length Given Sizes shown in Gas Pipe Nominal Size (NPT)					
1,700,000	3/4	1	1	1	1	1-1/4
1,800,000	3/4	1	1	1	1	1-1/4
1,900,000	3/4	1	1	1	1	1-1/4
2,000,000	3/4	1	1	1	1-1/4	1-1/4
2,200,000	3/4	1	1	1-1/4	1-1/4	1-1/4
2,400,000	1	1	1	1-1/4	1-1/4	1-1/2
2,600,000	1	1	1-1/4	1-1/4	1-1/4	1-1/2
2,800,000	1	1	1-1/4	1-1/4	1-1/4	1-1/2
3,000,000	1	1	1-1/4	1-1/4	1-1/4	1-1/2
For L.P. Gas, correct the total Btu/hr by multiplying it by 0.6. The answer is the equivalent Btu on the above chart.						

Table 5

© Published by permission of the copyright owner - DO NOT COPY or TRANSMIT

High Altitude Orifice Sizing

For proper operation at altitudes above 2000 feet [610 meters] , the gas orifice size must be reduced to ensure complete combustion. Heat input derate of 4% per 1000 feet [305 meters] of altitude above sea level. Refer to *Table 6* .

For IEC models, consult local gas supplier.

© Published by permission of the copyright owner - DO NOT COPY or TRANSMIT

Model	Market	Gas	Altitude	Burner Orifice			
			feet [meters]	No.	inches [mm]	Quan-tity	Part No.
120 Series	T, G, A, H, J, K, R, U	Natural Gas	2,001-4,000 [610-1,220]	18	0.1695 [4.31]	3	70684144
			4,001-6,000 [1,221-1,830]	20	0.1610 [4.09]		70684142
			6,001-8,000 [1,831-2,440]	22	0.1570 [3.99]		70684140
			8,001-10,000 [2,441-3,050]	25	0.1495 [3.80]		70684137
	T, G, H, J, R	L.P. Gas	2,001-4,000 [610-1,220]	37	0.1040 [2.64]		70684119
			4,001-6,000 [1,221-1,830]	38	0.1015 [2.58]		70684118
			6,001-8,000 [1,831-2,440]	40	0.0980 [2.49]		70684116
			8,001-10,000 [2,441-3,050]	42	0.0935 [2.37]		70684114
	U	L.P. Gas	2,001-4,000 [610-1,220]	41	0.0960 [2.44]		70684115
			4,001-6,000 [1,221-1,830]	42	0.0935 [2.37]		70684114
			6,001-8,000 [1,831-2,440]	2.3 mm	0.0906 [2.30]		70684113
			8,001-10,000 [2,441-3,050]	2.2 mm	0.0866 [2.20]		70684111
	A	L.P. Gas	2,001-4,000 [610-1,220]	37	0.1040 [2.64]		70684119
			4,001-6,000 [1,221-1,830]	38	0.1015 [2.58]		70684118
			6,001-8,000 [1,831-2,440]	40	0.0980 [2.49]		70684116
			8,001-10,000 [2,441-3,050]	42	0.0935 [2.37]		70684114

Table 6 *continues...*

© Published by permission of the copyright owner - DO NOT COPY or TRANSMIT

Model	Market	Gas	Altitude	Burner Orifice			
			feet [meters]	No.	inches [mm]	Quan-tity	Part No.
170 Series	T, G, A, H, J, K, R, U	Natural Gas	2,001-4,000 [610-1,220]	16	0.1770 [4.50]	4	70684147
			4,001-6,000 [1,221-1,830]	18	0.1695 [4.31]		70684144
			6,001-8,000 [1,831-2,440]	19	0.1660 [4.22]		70684143
			8,001-10,000 [2,441-3,050]	22	0.1570 [3.99]		70684140
	T, G, H, J, R	L.P. Gas	2,001-4,000 [610-1,220]	1/8	0.1250 [3.18]	3	70684128
			4,001-6,000 [1,221-1,830]	31	0.1200 [3.05]		70684126
			6,001-8,000 [1,831-2,440]	32	0.1160 [2.95]		70684125
			8,001-10,000 [2,441-3,050]	34	0.1110 [2.82]		70684123
	U	L.P. Gas	2,001-4,000 [610-1,220]	41	0.0960 [2.44]		70684115
			4,001-6,000 [1,221-1,830]	42	0.0935 [2.37]		70684114
			6,001-8,000 [1,831-2,440]	2.3 mm	0.0906 [2.30]		70684113
			8,001-10,000 [2,441-3,050]	2.2 mm	0.0866 [2.20]		70684111
	A	L.P. Gas	2,001-4,000 [610-1,220]	36	0.1065 [2.71]		70684120
			4,001-6,000 [1,221-1,830]	37	0.1040 [2.64]		70684119
			6,001-8,000 [1,831-2,440]	39	0.0995 [2.53]		70684117
			8,001-10,000 [2,441-3,050]	41	0.0960 [2.44]		70684115

Table 6 *continues...*

© Published by permission of the copyright owner - DO NOT COPY or TRANSMIT

Model	Market	Gas	Altitude	Burner Orifice			
			feet [meters]	No.	inches [mm]	Quan-tity	Part No.
200 Series	T, G, A, H, J, K, R, U	Natural Gas	2,001-4,000 [610-1,220]	13	0.1850 [4.70]	4	70684150
			4,001-6,000 [1,221-1,830]	16	0.1770 [4.50]		70684147
			6,001-8,000 [1,831-2,440]	11/64	0.1719 [4.37]		70684145
			8,001-10,000 [2,441-3,050]	19	0.1660 [4.22]		70684143
	T, G, H, J, R	L.P. Gas	2,001-4,000 [610-1,220]	3.30 mm	0.1299 [3.30]	3	70684130
			4,001-6,000 [1,221-1,830]	1/8	0.1250 [3.18]		70684128
			6,001-8,000 [1,831-2,440]	31	0.1200 [3.05]		70684126
			8,001-10,000 [2,441-3,050]	32	0.1160 [2.95]		70684125
	U	L.P. Gas	2,001-4,000 [610-1,220]	38	0.1015 [2.58]		70684118
			4,001-6,000 [1,221-1,830]	40	0.0980 [2.49]		70684116
			6,001-8,000 [1,831-2,440]	42	0.0935 [2.37]		70684114
			8,001-10,000 [2,441-3,050]	2.3 mm	0.0906 [2.30]		70684113
	A	L.P. Gas	2,001-4,000 [610-1,220]	35	0.1100 [2.79]		70684122
			4,001-6,000 [1,221-1,830]	36	0.1065 [2.71]		70684120
			6,001-8,000 [1,831-2,440]	37	0.1040 [2.64]		70684119
			8,001-10,000 [2,441-3,050]	39	0.0995 [2.53]		70684117

Table 6

© Published by permission of the copyright owner - DO NOT COPY or TRANSMIT

Electrical Requirements

Electrical Requirements

WARNING

- **To reduce the risk of electric shock, disconnect this appliance from the power supply before attempting any user maintenance other than cleaning the lint trap for dryers. Turning the controls to the OFF position does not disconnect this appliance from the power supply.**
- **To reduce the risk of fire and electric shock, check with a qualified service person for proper grounding procedures. Improper connection of the equipment grounding conductor may result in a risk of electric shock.**
- **Certain internal parts are intentionally not grounded and may present a risk of electric shock only during servicing. Service Personnel - Do not contact the following parts while the appliance is energized: Input/Output Board and Variable Frequency Drive, including the heat sinks.**
- **This appliance shall be installed in accordance with the rules in force, and dryers used only in a sufficiently ventilated space. Consult technical instruction before installation and use of this appliance.**

W935

CAUTION

Outside of Europe, to reduce the risk of injury or component failure, if electrical supply is coming from a three phase service, DO NOT connect a "High Leg" or "Stinger Leg" to a single phase machine. On a three phase machine, if there is a "High Leg" or "Stinger Leg" it should be connected to L3.

W938

WARNING

The appliance must not be supplied through an external switching device, such as a timer, or connected to a circuit that is regularly switched on and off by a utility.

W943

IMPORTANT: Electrical connections must be made by a qualified electrician using data on serial plate, installation manuals and wiring diagram provided with tumble dryer and according to local codes. Install a circuit breaker as close to the tumble dryer as possible. If more than one tumble dryer is being installed, a circuit breaker must be provided for each.

NOTE: Connect tumble dryer to an individual branch circuit not shared with lighting or other equipment.

NOTE: 3 Phase Tumble Dryers Only - Do not use fuses to avoid the possibility of “single phasing” and causing premature failure of the motors.

WARNING

In case of servicing (or putting the tumble dryer out of order), disconnect the tumble dryer from the main supply by switching off the circuit breaker.

W796

Wiring Diagram

NOTE: Wiring diagram location: inside electrical box.

The wiring diagram part number is in the lower portion of the electrical data on the serial plate.

Grounding Instructions

NOTE: To ensure protection against shock, this machine MUST be electrically grounded in accordance with the local codes, or in the absence of local codes, with the latest edition of the National Electrical Code ANSI/NFPA No. 70. In Canada the electrical connections are to be made in accordance with CSA C22.1 latest edition Canadian Electrical Code, or local codes. Electrical work should be done by a qualified electrician.

This machine must be grounded. In the event of malfunction or breakdown, grounding will reduce the risk of electric shock by providing a path of least resistance for electric current. This machine must be connected to a grounded metal, permanent wiring system; or an equipment grounding conductor must be run with the circuit conductors and connected to the appropriate ground location.

- Metal conduit and/or BX cable is not considered ground.
- Connecting the Neutral from the electrical service box to the tumble dryer ground screw does not constitute a ground.
- A dedicated ground conduit (wire) must be connected between the electrical service box ground bar and machine ground screw.

© Published by permission of the copyright owner - DO NOT COPY or TRANSMIT

WARNING

To reduce the risk of electrical shock, de-energize the electrical circuit being connected to the tumble dryer before making any electrical connections. All electrical connections should be made by a qualified electrician. Never attempt to connect a live circuit.

W409R1

CAUTION

Label all wires prior to disconnection when servicing controls. Wiring errors can cause improper and dangerous operation. Verify proper operation after servicing.

W071

For On Premises Laundry (OPL) Models Only

IEC OPL (non-vend) models are factory-equipped with an emergency stop button on the front panel.

NOTE: Activation of the emergency stop switch stops all tumble dryer control circuit functions, but DOES NOT remove all electrical power from tumble dryer.

Service/Ground Location

Model	Ground and Terminal Block Locations
Gas and Steam	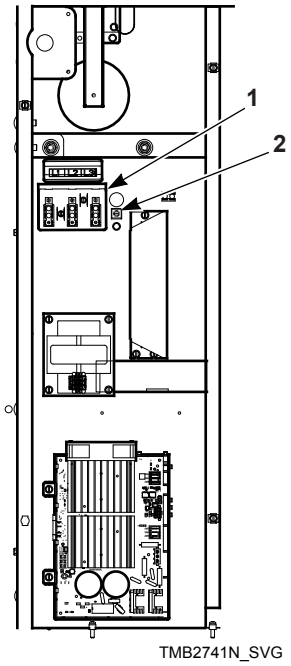 1. Power Distribution Block 2. Ground

Table continues...

© Published by permission of the copyright owner - DO NOT COPY or TRANSMIT

Model	Ground and Terminal Block Locations
Electric (120 only)	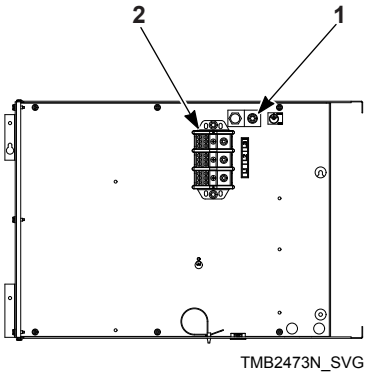 1. Ground 2. Power Distribution Block

© Published by permission of the copyright owner - DO NOT COPY or TRANSMIT

To Connect Electrical Service To The Tumble Dryer

NOTE: The wiring diagram is located in the junction box.

1. Install a circuit breaker as close to the tumble dryer as possible. If more than one tumble dryer is being installed, a disconnect switch or circuit breaker should be provided for each. This will make it possible to disconnect each tumble dryer for maintenance purposes.
2. Connect the wire leads to the appropriate labeled terminal on the terminal block. The ground wire must be connected to the ground connection as shown in *Service/Ground Location* .

Electrical Specifications

NOTE: Wire sizes were obtained from the Canadian Electrical Code for 75 C. wire and are intended for use as a guideline only. Electrical connections should be made by a qualified electrical contractor in accordance with all applicable local and national requirements.

NOTE: Electrical specifications below are subject to change without notice. Always refer to product serial plate for most current specifications of product being installed.

CAUTION

Use copper conductors only with the following rating when wiring appliance to electric supply: Dryer gas and steam heat models require 187°F (75°C) minimum. Dryer electric heat models require 194°F (90°C) minimum.

W936

NOTE: Connect this appliance to an individual branch circuit.

NOTE: 3 Phase Only – Each tumble dryer must be connected to its own individual branch circuit breaker, not fuses, to avoid the possibility of "single phasing" and causing premature failure of the motor(s).

120 Series Gas and Steam Models

Code	Voltage	Cycle	Phase	Terminal Block Connections Required	Full Load Amps	Recommended Circuit Breaker Rating Amps	Wire Size AWG [mm2]
Q	200-240	50-60	3	L1, L2, L3 and ground	7	15	14 [2.5]
N	440-480	50-60	3	L1, L2, L3 and ground	4	15	14 [2.5]
P	380-415	50-60	3	L1, L2, L3 and ground	4	15	14 [2.5]

Table 7

© Published by permission of the copyright owner - DO NOT COPY or TRANSMIT

120 Series Electric Models

Code	Voltage	Cycle	Phase	Terminal Block Connections Required	Full Load Amps	Recommended Circuit Breaker Rating Amps	Wire Size AWG [mm2]
G	230-240	50-60	3	L1, L2, L3 and ground	147	200	3/0 [95]
H	380	50-60	3	L1, L2, L3 and ground	94	125	1 [50]
J	400-415	50-60	3	L1, L2, L3 and ground	86	110	2 [35]
K	440	50-60	3	L1, L2, L3 and ground	82	110	2 [35]
L	460-480	50-60	3	L1, L2, L3 and ground	75	100	3 [26.7]

Table 8

170 Series Gas and Steam Models

Code	Voltage	Cycle	Phase	Terminal Block Connections Required	Full Load Amps	Recommended Circuit Breaker Rating Amps	Wire Size AWG [mm2]
Q	200-240	50-60	3	L1, L2, L3 and ground	11	15	14 [2.5]
N	440-480	50-60	3	L1, L2, L3 and ground	6	15	14 [2.5]
P	380-415	50-60	3	L1, L2, L3 and ground	7	15	14 [2.5]

Table 9

200 Series Gas and Steam Models

Code	Voltage	Cycle	Phase	Terminal Block Connections Required	Full Load Amps	Recommended Circuit Breaker Rating Amps	Wire Size AWG [mm2]
Q	200-240	50-60	3	L1, L2, L3 and ground	12	15	14 [2.5]

Table 10 *continues...*

© Published by permission of the copyright owner - DO NOT COPY or TRANSMIT

N	440-480	50-60	3	L1, L2, L3 and ground	6	15	14 [2.5]
P	380-415	50-60	3	L1, L2, L3 and ground	7	15	14 [2.5]

Table 10

© Published by permission of the copyright owner - DO NOT COPY or TRANSMIT

Steam Requirements

Steam Requirements

WARNING

This appliance does not contain inherent pressure relief. A pressure relief valve rated for a maximum of 125 psi shall be provided by the steam source.

W942

NOTE: Steam valve and required adapter are located in cylinder or lint compartment.

NOTE: Machines require a constant 80 to 100 psig [5.3 to 6.9 bar] steam service for optimum operation. The maximum allowable steam pressure is 125 psig [8.6 bar] . In no case may the pressure exceed the above value.

Obtain specific steam service pipe sizes from steam system supplier or a qualified steam fitter.

- Refer to *Figure 16* and *Figure 17* for proper steam pipe configurations.
- To prevent condensate draining from headers to tumble dryer, piping should have a minimum 12 inch [300 mm] rise above respective header. Do not make steam connection to header with a horizontal or downward facing tee or elbow.
- Whenever possible, horizontal runs of steam lines must drain, by gravity, to respective steam header. Water pockets, or an improperly drained steam header will provide wet steam, causing improper operation of tumble dryer. If pockets or improper drainage cannot be eliminated, install a bypass trap to drain condensate from the low point in the steam header to the return.
- In both steam supply and steam return line, it is recommended that each have a pipe union and shut-off valve. This will enable you to disconnect the steam connections and service the tumble dryer while your laundry facility is in operation.
- Connect the steam solenoid valve to the related steam coil inlet connection with nipples, flex hoses, unions and tees.
- Strainers may require cleaning due to materials from hoses or pipes.
- Install vacuum breaker (optional), bucket trap with built-in strainer and check valve. For successful operation of tumble dryer, install trap 18 inches [460 mm] below coil and as near to the tumble dryer as possible. Inspect trap carefully for inlet and outlet markings and install according to trap manufacturer's instructions. If steam is gravity returned to boiler, omit trap but install vacuum breaker and check valve in return line near tumble dryer. Gravity return requires entire return plumbing be below steam coil outlets.
- Install union and shut-off valve in return line and make final pipe connections to return header.

NOTE: To prevent water hammering, route return lines below outlets of steam coils.

NOTE: Steam inlet lines of each dryer should be trapped to keep line condensation from going into steam coils.

NOTE: IEC machines are shipped with BSPT adapters in the lint compartment.

© Published by permission of the copyright owner - DO NOT COPY or TRANSMIT

120 Series Tumble Dryers

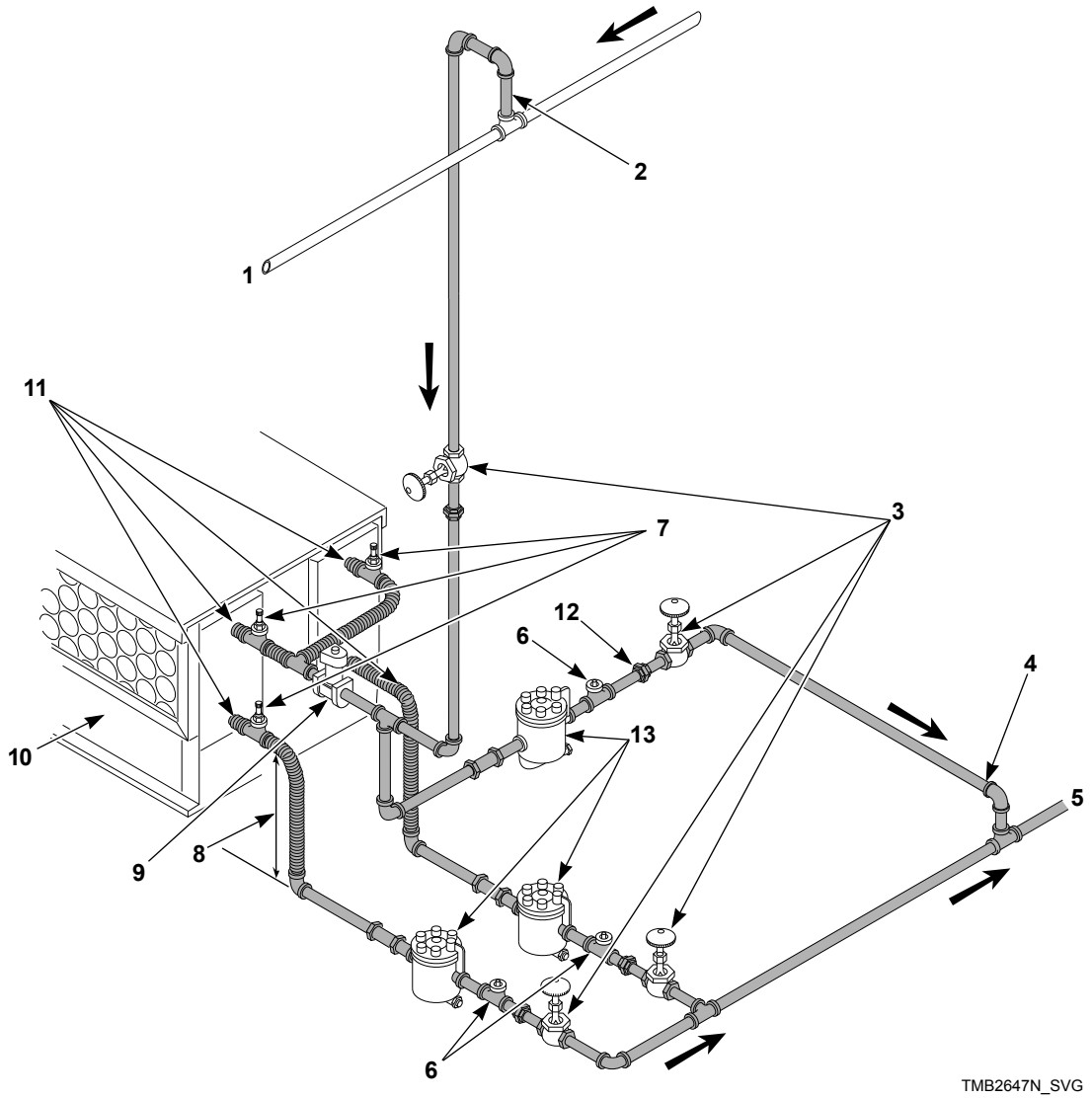

NOTE: Refer to *Table 11* for sizing of steam lines. Piping must also be sized accordingly for length of runs and number of elbows.

1. Supply
2. 12 in. [300 mm] Riser
3. Shut-Off Valve
4. Condensate Return Line from Supply Line
5. Return
6. Check Valve
7. Vacuum Breaker (Optional)
8. 18 in. [460 mm] Drop Recommended (not above outlet)
9. Solenoid Valve (Supplied with machine)
10. Steam Bonnet
11. Flexible Line
12. Union
13. Trap with Built-In Strainer

Figure 16

© Published by permission of the copyright owner - DO NOT COPY or TRANSMIT

Steam Pressure PSI [bar]	Minimum Supply Pipe Diameter	Steam Trap Size* Pounds Condensate/Hour [Kilograms Condensate/Hour]
80-100 [5.3-6.9]	1 NPT	195 [88.45]
*Based on 6.9 bar.		

Table 11

© Published by permission of the copyright owner - DO NOT COPY or TRANSMIT

170 and 200 Series Tumble Dryers

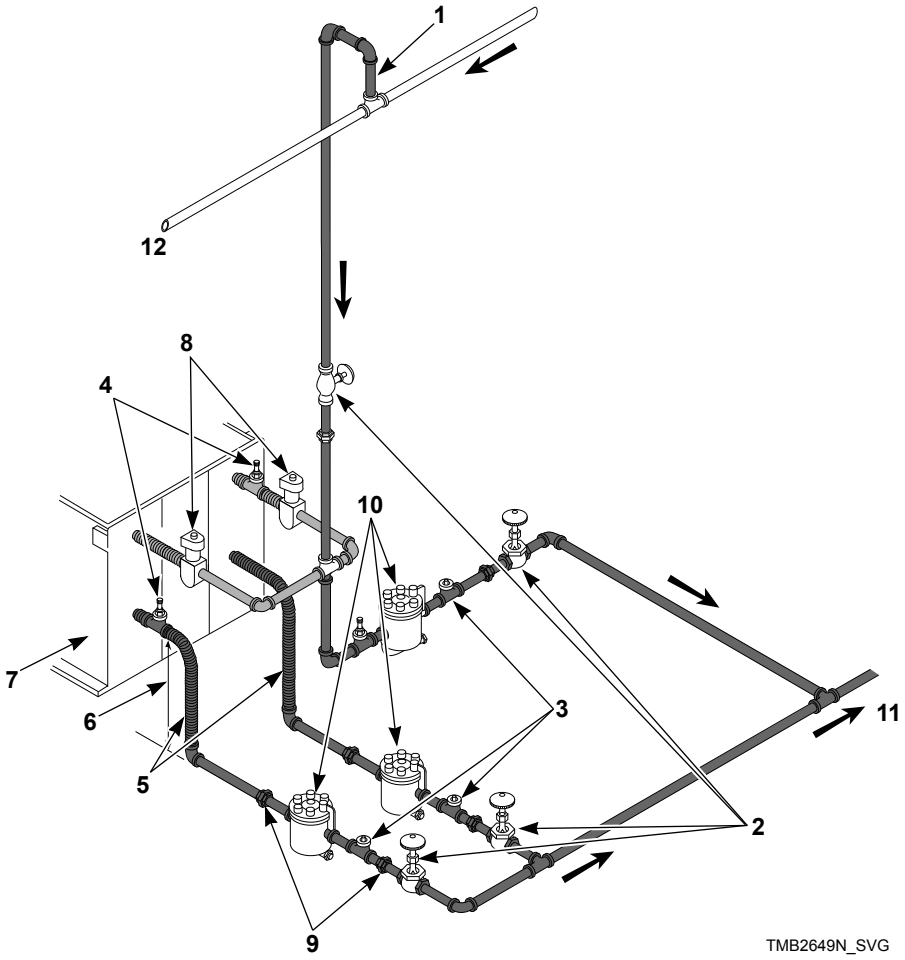

NOTE: Refer to *Table 12* for sizing of steam lines. Piping must also be sized accordingly for length of runs and number of elbows.

1. Risers 12 in. [300 mm]
2. Shut-Off Valve
3. Check Valve
4. Vacuum Breaker (optional)
5. Condensate Return Line from Supply Line
6. Drop 18 in. [460 mm] Recommended (not above outlet)
7. Steam Bonnet
8. Solenoid Valve (Supplied with machine)
9. Union
10. Trap with Built-In Strainer
11. Return
12. Supply

Figure 17

© Published by permission of the copyright owner - DO NOT COPY or TRANSMIT

Steam Pressure PSI [bar]	Minimum Supply Pipe Diameter	Steam Trap Size* Pounds Condensate/Hour [Kilograms Condensate/Hour]
80-100 [5.3-6.9]	1-1/4 NPT	275.7 [125.7]
* Based on 6.9 bar.		

Table 12

Piping Recommendations

- Trap each steam coil individually. Always keep the trap clean and in good working condition.
- When tumble dryer is on the end of a line of equipment, extend header at least 4 feet [1.2 m] beyond tumble dryer. Install shut-off valve, union, check valve and bypass trap at end of line. If gravity return to boiler, omit trap.
- Insulate steam supply and return lines for safety of operator and safety while servicing tumble dryer.

WARNING

All system components must have a 125 psig [8.6 bar] working pressure. Shut-off valves must be installed upstream of the steam solenoid valve and downstream of each steam trap so components can be isolated for maintenance or emergency purposes. All components (solenoid valve, traps) must be supported to minimize loads on the tumble dryer steam coil connections.

W701R1

Installing Steam Trap and Making Condensate Return Connections

The steam trap must be installed and the coil outlet connections must be connected to the condensate return lines. The following steps outline the procedure for installing the steam trap and connecting the condensate return lines. Refer to *Figure 16* and *Figure 17* for typical installations.

1. Use flexible lines between steam inlet solenoid and steam coils, as well as outlet between steam coil and traps.
2. If necessary, install a strainer at the end of each flexible hose.
3. Install a steam trap to each strainer.

   IMPORTANT: Steam trap must be installed a minimum of 18 inches [460 mm] recommended below the steam coil outlet connections.
4. Install a shut-off valve to each steam trap.
5. Connect to the condensate return lines.
6. For steam solenoid valve wiring connections, refer to Wiring Diagram supplied with tumble dryer.

© Published by permission of the copyright owner - DO NOT COPY or TRANSMIT

Adjustments

Adjustments

WARNING

To reduce the risk of electric shock, fire, explosion, serious injury or death:

- **Disconnect electric power to the tumble dryer before servicing.**
- **Close gas shut-off valve to gas tumble dryer before servicing.**
- **Close steam valve to steam tumble dryer before servicing.**
- **Never start the tumble dryer with any guards/ panels removed.**
- **Whenever ground wires are removed during servicing, these ground wires must be reconnected to ensure that the tumble dryer is properly grounded.**

W002R1

Gas Burner Air Shutter

NOTE: Air inlet shutters on the burner must be adjusted so sufficient air is metered into the system for proper combustion and maximum efficiency. Before adjusting the inlet shutters be sure that all lint is removed from lint compartments and lint screen.

Air shutter adjustments will vary from location to location and will depend on the vent system, number of units installed, make-up air and line gas pressure. Opening the shutter increases the amount of primary air supplied to the burner while closing the shutter decreases the primary air supply. Adjust air shutter as follows:

Refer to *Figure 18* .

1. Remove the burner inspection hole plate.

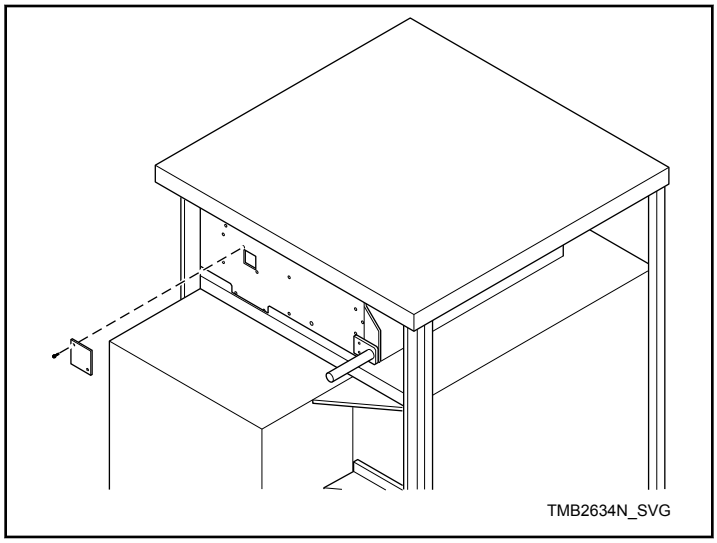

Figure 18

2. Start the tumble dryer and check the flame pattern. If the flame pattern is straight up, insufficient air is flowing through the tumble dryer. A flame pattern that flares to the right and left indicates no air is flowing through the tumble dryer. Correct air and gas mixture is indicated if the flame pattern is primarily blue, with small yellow tips, and bends to the right of the heater section. Too little air is indicated if the flame if yellow, lazy and smokey. (A whistling sound from burner could also be caused by an improper air shutter setting.)
3. To adjust the air shutter, loosen air inlet shutter adjusting screw.
4. Open or close air shutter as necessary to obtain proper flame intensity.
5. After air shutter is adjusted for proper flame, tighten air shutter adjusting screw securely.

© Published by permission of the copyright owner - DO NOT COPY or TRANSMIT

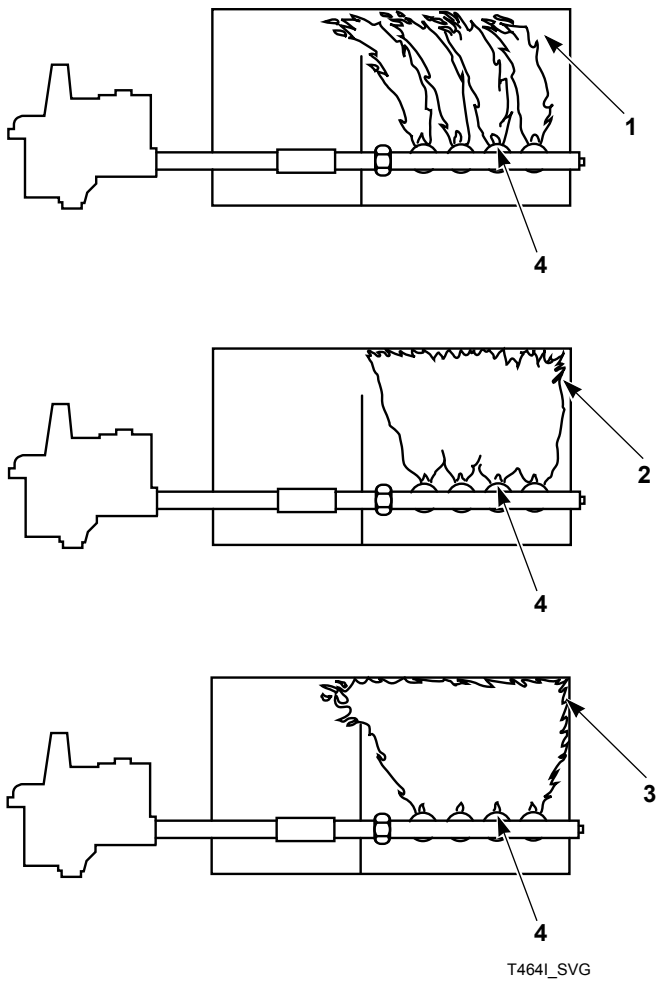

1. Proper Airflow
2. Insufficient Airflow
3. No Airflow
4. Air Shutter Adjusting Screw

Figure 19

Airflow Switch

The airflow switch is set at the factory for proper operation. No adjustment necessary.

The airflow switch operation may be affected by shipping wire tie still in place, lack of make-up air, or an obstruction in the exhaust duct. These should be checked and the required corrective action taken.

WARNING

The tumble dryer must not be operated if the airflow switch does not operate properly. Faulty airflow switch operation may cause an explosive gas mixture to collect in the tumble dryer.

W072R1

IMPORTANT: Airflow switch vane must remain closed during operation. If it opens and closes during the drying cycle, this indicates insufficient airflow through the tumble dryer. If switch remains open, or pops open and closed during the cycle, the heating system will shut off. The cylinder and fan will continue to operate even though the airflow switch is indicating insufficient airflow.

NOTE: To properly mount the airflow switch bracket, or in case of a load not drying, the airflow switch bracket may need to be checked for proper alignment. Be sure the locator pins are securely in their respective holes before tightening the bracket mounting screws. This will assure proper alignment of the airflow switch arm in the channel of the airflow switch bracket and prevent binding of the arm.

Loading Door Switch

Loading door switch is factory preset, no field adjustment is necessary.

Loading Door Catch

The door catch must be adjusted to have sufficient tension to hold loading door closed against force of load tumbling against it. Proper adjustment is when 8-15 pounds [35.6N - 66.7N] pull is required to open door.

If adjustment is required, refer to *Figure 20* and proceed as follows:

1. Open door.
2. Loosen acorn nut.
3. Turn door strike screw in or out as required.
4. Tighten acorn nut.

© Published by permission of the copyright owner - DO NOT COPY or TRANSMIT

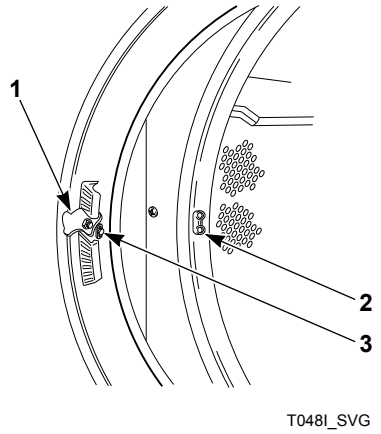

1. Door Latch
2. Door Catch
3. Acorn Nut

Figure 20

Manual Resettable Thermostat

NOTE: The manual resettable thermostat is located on rear panel below drive motor.

If thermostat trips, contact a qualified service technician.

Belt Drive

The drive assembly consists of a motor, four pulleys, two belts, idler housing, upper belt adjustment jack eyebolt/tube, lower belt adjustment eyebolt and a spring.

The pulley diameters are sized to produce a cylinder speed of 37-39 RPM for 120 series models or 29-31 RPM for 170 and 200 series models.

The idler housing pulleys are used for speed reduction as well as a means of adjusting belt tension. The idler housing is attached to the cabinet rear center braces. The cabinet rear center braces have vertically slotted holes allowing up and down movement of the idler housing for belt adjustment.

Refer to *Figure 21* .

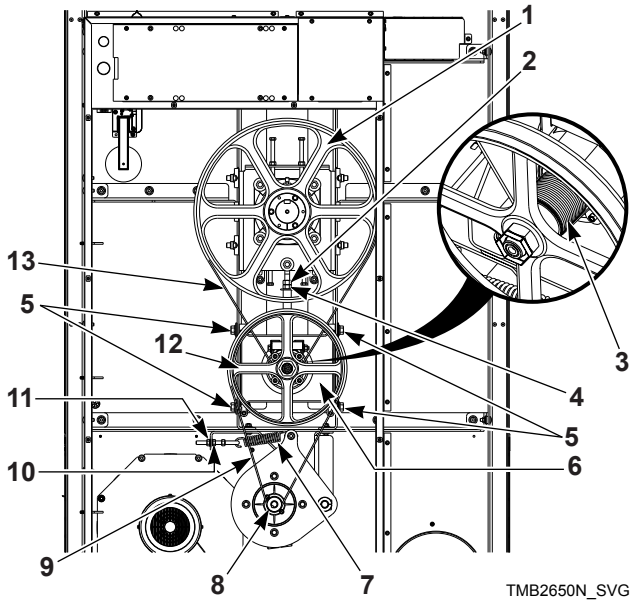

1. Basket Pulley
2. Upper Jam Nut
3. Idler Housing Small Pulley
4. Upper Belt Tensioning Nut and Bolt
5. Idler Housing Mounting Screws
6. Idler Housing
7. Belt Tensioning Screw
8. Motor Pulley
9. Lower Belt (Measure Frequency at Mid-Span)
10. Right Jamnut
11. Left Tensioning Nut
12. Idler Housing Large Pulley
13. Upper Belt (Measure Frequency at Mid-Span)

Figure 21

© Published by permission of the copyright owner - DO NOT COPY or TRANSMIT

Upper Belt Tension

1. Disconnect electrical power to the tumble dryer before attempting any adjustments to the drive assembly.
2. Loosen idler housing mounting screws.

IMPORTANT: Do not remove screws. Shoulder washers must be engaged in center brace slots.

3. Loosen the upper jamnut on the upper belt tensioning bolt/tube.
4. Rotate the lower nut of the upper belt tensioning bolt/tube clockwise until proper belt tension is achieved.

IMPORTANT: Always rotate the basket pulley a minimum of three full rotations before taking a belt tension reading.

5. Rotate upper jamnut clockwise against the lower nut in order to lock it into place, restraining the lower nut from turning.
6. Tighten idler housing mounting screws (torque to 50 ft-lbs). Recheck belt tension.
7. Lower belt tension will be affected by adjusting the upper belt tension as it is a dependent system. Refer to section below to adjust lower belt.

Lower Belt Tension

1. Disconnect electrical power to the tumble dryer before attempting any adjustments to the drive assembly.
2. Loosen the right jamnut on the lower belt adjustment eyebolt.
3. Rotate the left nut on the lower belt adjustment eyebolt clockwise until proper belt tension is achieved.

IMPORTANT: Always rotate the basket pulley a minimum of three full rotations before taking a belt tension reading.

IMPORTANT: Grasp eyebolt neck to prevent spring rotation during nut rotation.

4. Rotate right jamnut clockwise against the lower spring tension plate in order to lock it into place, restraining the left nut from turning. Recheck belt tension.

NOTE: Proper tensions for new belts are measured with a Belt Tension Frequency Gauge.

Belts should not slip or make any noise when starting up under normal load.

	Initial Frequency	After Run-in Frequency
Upper Belt	115 Hz +/-4 Hz	102 Hz +15/-2 Hz
Lower Belt	105 Hz +4/-2 Hz	102 Hz +4/-2 Hz

Table 13

© Published by permission of the copyright owner - DO NOT COPY or TRANSMIT

Before You Call for Service

Won't Start	Won't Heat	Clothes Not Dry	Possible Reason – Corrective Actions
•			Insert correct coin(s) or valid card if applicable.
•			Close the loading door tightly.
•			Close lint panel tightly.
•			Press the PUSH-TO-START or START pad/button.
•			Be sure power cord is plugged all the way into the electrical outlet and hard or direct wire connections are tight.
•			Check the main fuse and circuit breaker.
•			Check fuses located in the machine.
	•		Insufficient airflow.
	•		Gas shut-off valve in OFF position.
	•		Are controls properly set?
	•		Broken drive belt. Call the service person.
	•	•	Tumble dryer is in Cool Down Mode.
	•	•	Lint screen clogged. Clean lint screen.
	•	•	Exhaust duct to outside is blocked. Clean out.

© Published by permission of the copyright owner -
DO NOT COPY or TRANSMIT

Removing Tumble Dryer from Service

1. Turn off electrical supply external to machine.
2. Turn off gas supply external to machine.
3. Turn off manual gas shut-off valve on machine.
4. Turn off steam supply external to machine.
5. Remove all electric, gas and steam connections.

© Published by permission of the copyright owner -
DO NOT COPY or TRANSMIT

Disposal of Unit

This appliance is marked according to the European directive 2002/96/EC on Waste Electrical and Electronic Equipment (WEEE).

This symbol on the product or on its packaging indicates that this product shall not be treated as household waste. Refer to *Figure 22* . Instead it shall be handed over to the applicable collection point for the recycling of electrical and electronic equipment. Ensuring this product is disposed of correctly will help prevent potential negative consequences for the environment and human health which could otherwise be caused by inappropriate waste handling of this product. The recycling of materials will help to conserve natural resources. For more detailed information about recycling of this product, please contact the local city office, household waste disposal service, or the source from which the product was purchased.

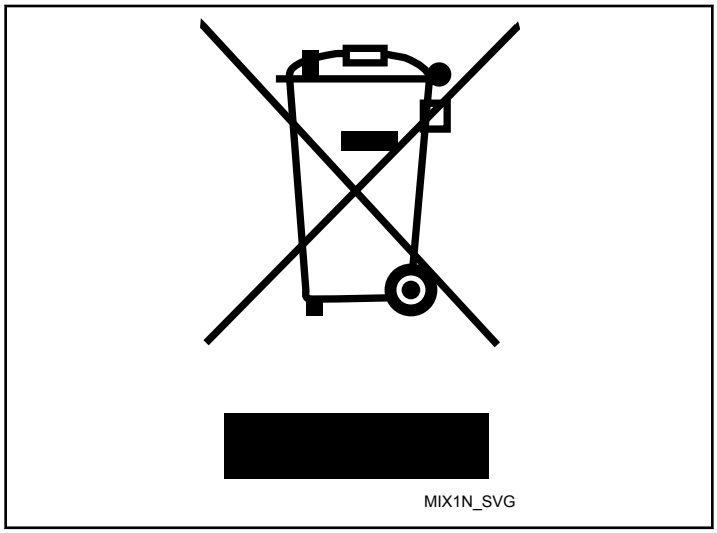

Figure 22

© Published by permission of the copyright owner - DO NOT COPY or TRANSMIT